# Price List

Valid from 1st April 2026

# Europe

# Terms & Conditions

## Partner Terms and Commercial Conditions

- Commercial discounts and partner conditions are defined in individual Hem Partner Terms.
- Please contact your Hem representative for applicable partner terms and pricing conditions.

## Payment Terms

- Default payment terms are Cash in Advance (CIA).
- Alternative payment terms may be approved on request and are subject to credit review and written agreement.

## Availability & Lead Times

- Hem maintains EU inventory of selected products and finishes, allowing for quicker fulfillment where available.
- Product availability and lead times are confirmed upon quotation. Please reference hem.com for real-time inventory availability, or reach out to orders@hem.com.

## Incoterms & Delivery

- Deliveries are made Delivered At Place (DAP), unless otherwise agreed in writing, meaning the buyer is responsible for unloading and any applicable local VAT.
- EXW (Ex Works) is available on request and subject to approval.

**Express freight is available on request and charged at cost.**

## Shipping and Duties

- Flat freight: €149 per order
- Flat parcel: €49 per order
- Free freight for orders above €2,000 net

## Custom Program

- Graded-In Textile and Custom products are produced on demand.
- Applicable lead times are confirmed upon quotation.

# Order Changes and Cancellations

- Orders may be cancelled or amended within 48 hours of written order confirmation.
- After this period, orders are binding and cannot be cancelled unless approved by Hem.

# Delivery Delays and Storage

- If delivery is delayed at the customer's request, Hem may store goods for a limited grace period.
- Extended delays may result in storage fees, additional handling costs, or delivery at the customer's cost.
- Open-ended delivery holds should be avoided and require Hem's approval.
- For EXW orders, goods must be collected within a commercially reasonable period after Hem's ready-for-pickup notification.
- Storage fees and additional handling or delivery costs may apply for delayed pickup.

# Quotes and Pricing

- Quotes are valid for 30 days unless otherwise stated.
- Hem reserves the right to adjust prices due to currency fluctuations, material cost changes, or supplier increases.

# Digital Tools and Samples

- The Hem Pro portal can be used to:
  - Place orders and create quotes
  - View stock levels
  - Access CAD and Revit files
  - Order material samples

# Legal Disclaimer

- Hem reserves the right to alter prices without prior notice and correct any errors in price lists or documentation. For full terms and conditions, please reference https://pro.hem.com/en-eu/terms-and-conditions

**General Questions: info@hem.com**
**Send in orders: orders@hem.com**

Imaginative Design INT AB
Högbergsgatan 27, 11620 Stockholm
Phone: + 46 (0)8 408 067 40

**To complement our existing curated collection Hem offers a *Graded-in program* which makes it easy for partners, designers and architects to satisfy individual needs and preferences.**

**Please reach out to orders@hem.com for any questions or requests.**

## Samples

For textile samples outside of Hem's curated collection, please reach out to their local representatives:

*www.kvadrat.dk*
*www.butefabricsltd.com*
*www.rohi.com*
*www.gu.no*
*www.chioccarello.it*
*www.maharam.com*
*www.camirafabrics.com*
*www.dedar.com*

| Grade | Manufacturer | Textile Name | Bon Pouf | Bullnose Seat Pad | Experiment Chair | Great Sofa | Hai Lounge Chair | Hunk Lounge Chair | Kendo Chair | Kumo Sofa | Koti Sofa | Palma Pouf | Palo Sofa | Palo Block Sofa | Puffy Lounge Chair | Puffy Sofa | Touchwood Chair | Udon Chair |
|---|---|---|---|---|---|---|---|---|---|---|---|---|---|---|---|---|---|---|
| 1 | Chioccarello | Disco Coex | • | | | | | • | | | | | • | • | • | • | | |
| 1 | Gabriel | Cura | • | | | | • | • | • | • | | | • | • | • | • | • | • |
| 1 | Kvadrat | Autumn | • | | | | • | • | • | • | • | | • | • | | | | |
| 1 | Kvadrat | Guest | | | | | | | | | | | | | | | | |
| 2 | Delius | Solo | | | | | | | | | | | • | • | | | | |
| 2 | GU | Amdal | • | | | | • | • | | | • | | • | • | • | • | | |
| 2 | Kvadrat | Remix 3 | • | | | | • | • | | | | | • | • | • | • | • | • |
| 2 | Kvadrat | Steelcut 3 | • | | • | | • | • | • | • | • | • | • | • | • | • | • | |
| 2 | Kvadrat | Melange Nap | • | | | | • | • | | | • | | • | • | • | • | | |
| 2 | Kvadrat | Autumn (laminated) | | | | • | | | | | | | • | | | | | |
| 2 | Kvadrat | Technicolour | | | | | | | | | | | | | | | | |
| 2 | Kvadrat | Atlas | • | | | | | | | | | | • | • | • | • | | |
| 3 | Kvadrat | Canvas 2 | • | | | | • | • | | | • | | • | • | • | • | • | • |
| 3 | Kvadrat | Re-wool | • | | | | • | • | • | • | | | • | • | • | • | • | • |
| 3 | Kvadrat | Hero | • | | | | • | • | | | • | | • | • | • | • | | |
| 3 | Maharam | Mode | • | | | | • | • | | | • | | • | • | • | • | | |
| 3 | Rohi | Arco | • | | | | • | • | • | • | • | | • | • | • | • | • | • |
| 3 | Rohi | Cleo | • | | | | • | • | • | • | • | | • | • | • | • | • | • |
| 3 | Rohi | Credo | • | | | | • | • | | | • | | • | • | • | • | • | • |
| 3 | Rohi | Mica | • | | | | • | • | | | • | | • | • | • | • | | • |
| 3 | Rohi | Novum | • | | | | • | • | • | • | • | | • | • | • | • | • | • |
| 3 | Rohi | Opera | • | | | | • | • | | | • | | • | • | • | • | • | • |
| 3 | Rohi | Sera | • | | | | • | • | • | • | • | | • | • | • | • | • | • |
| 3 | Rohi | Shake | • | | | | • | • | • | • | • | | • | • | • | • | • | • |
| 4 | Camira | Blazer | • | | | | • | • | | | • | | • | • | • | • | | |
| 4 | Camira | Synergy | • | | | | • | • | | | • | | • | • | • | • | | |
| 4 | Chioccarello | Velluto Coex | • | | | | | | | | | | • | • | • | • | | |
| 4 | Kvadrat | Steelcut Trio 3 | • | | | | • | • | • | • | • | | • | • | • | • | • | • |
| 4 | Kvadrat | Fiord 2 | • | | | | • | • | | | • | | • | • | • | • | • | • |
| 4 | Kvadrat | Hallingdal 65 | • | | | | • | • | • | • | • | | • | • | • | • | • | • |
| 4 | Kvadrat | Uniform Melange | • | | | | • | • | | | • | | | • | • | • | • | |
| 4 | Kvadrat | Razzle Dazzle | • | | | | • | • | | | • | | • | • | • | • | | |

**• = Graded-in textiles**
**Blank: Not yet graded-in, please contact orders@hem.com and we will help you make it work.**

| Grade | Manufacturer | Textile Name | Bon Pouf | Bullnose Seat Pad | Experiment Chair | Great Sofa | Hai Lounge Chair | Hunk Lounge Chair | Kendo Chair | Kumo Sofa | Koti Sofa | Palma Pouf | Palo Sofa | Palo Block Sofa | Puffy Lounge Chair | Puffy Sofa | Touchwood Chair | Udon Chair |
|---|---|---|---|---|---|---|---|---|---|---|---|---|---|---|---|---|---|---|
| 4 | Kvadrat | Asator | | | | | | | | | | | | | | | | |
| 4 | Kvadrat | Divina Melange 3 | • | | | | • | • | | | • | | • | • | • | • | • | • |
| 4 | Sahco | Safire | | | | | | | | | | | | | | | | |
| 4 | Sahco | Firo | | | | | | | | | | | | | | | | |
| 5 | Dedar | Ingrid | • | | | | | • | | | | | | | • | • | | |
| 5 | Dedar | Loop Loop | • | | | | • | • | • | • | • | • | • | • | • | • | | |
| 5 | Kvadrat | Tonus 4 | • | | | | • | • | • | • | • | | • | • | • | • | • | • |
| 5 | Kvadrat | Vidar 4 | • | | | | • | • | • | • | • | | • | • | • | • | • | • |
| 5 | Kvadrat | Mizmaze | • | | | | • | • | • | • | • | | • | • | • | • | | |
| 5 | Kvadrat | Vanir | • | | | | • | • | | | • | | • | • | • | • | | |
| 5 | Kvadrat | Moss | • | | | | | • | • | • | • | | • | • | • | • | | |
| 5 | Kvadrat | Mosaic 2 | • | | | | • | • | • | • | • | | • | • | • | • | | |
| 5 | Sahco | Safire (laminated) | | | | • | | | | | | | | | | | | |
| 5 | Sahco | Zero | • | | | | • | • | • | • | • | | • | • | • | • | • | • |
| 5 | Sahco | Cifrado | | | | | | | | | | | | | | | | |
| 5 | Sahco | Firo | | | | | | | | | | | | | | | | |
| 5 | Sahco | Nalia | | | | | | | | | | | | | | | | |
| 6 | Bute | Storr | • | | | | • | • | • | • | • | • | • | • | • | • | | |
| 6 | Bute | Tiree | • | • | • | | • | • | • | • | • | • | • | • | • | • | • | • |
| 6 | Kvadrat | Arda | • | | | | • | • | • | • | • | | • | • | • | • | | |
| 6 | Kvadrat | Sunniva 3 | • | | | | • | • | • | • | • | | • | • | • | • | | |
| 6 | Kvadrat | Sisu | • | | | | • | • | | | • | | • | • | • | • | | |
| 6 | Kvadrat | Sprinkles | • | | | | • | • | • | • | • | | • | • | • | • | | |
| 6 | Maharam | Firma | • | | | | • | • | | • | • | | • | • | • | • | | |
| 6 | Sahco | Cifrado (laminated) | | | | • | | | | | | | | | | | | |
| 6 | Sahco | Tablu | • | | • | | | | | | • | | | | • | • | | |
| 7 | Kvadrat | Gentle 2 | • | | | | • | • | • | • | • | • | • | • | • | • | | |
| 8 | Kvadrat | Ria 2 | • | | | | • | • | • | • | • | | • | • | • | • | • | • |
| 8 | Kvadrat | Sonar 3 | • | | | | • | • | • | | | | • | • | • | • | | |
| 8 | Maharam | Aria | • | | | | • | • | | | • | | • | • | • | • | | |
| Leather | Elmo | Elmosoft | | • | • | | | | • | | | • | | | • | | | • |

**• = Graded-in textiles**
**Blank: Not yet graded-in, please contact orders@hem.com and we will help you make it work.**

# Chairs

# Stools

**From the ultimate easy chair to the perfect bistro chair, we've engineered a collection of seating for every situation and every interior, making sure you are always supported in comfort and style.**

# All Wood Stool Rocket & Bobbin

*Design by Karoline Fesser*

Like a good friend, the All Wood Stool is easy to be around. This functional piece of occasional furniture can be a side table, a seat, or a platform on which to display your favorite things. Adjust its height whenever you like with a simple turn of its screw mechanism. Designer Karoline Fesser nods to midcentury icons such as the Eames Time Life stool as well as functional workshop furniture like sculptors' tables. As its name implies, this piece is made from solid ash or walnut wood, CNC cut, and lacquered. Choose from two shapes, Rocket or Bobbin.

| Product name | Finish | SKU |
|---|---|---|
| **All Wood Stool Rocket** | Walnut | 14148 |
| | Ash | 14149 |
| **All Wood Stool Bobbin** | Walnut | 14150 |
| | Ash | 14151 |

**Material**
*Solid Walnut*
Juglans Nigra
Clear Lacquered

*Solid Ash*
Fraxinus Excelsior
Clear Lacquered

Wood is a natural material. The color might vary from piece to piece

**Country of origin**
Poland

**Tests & certifications**
EN 16139:2013 – L1: General Use – Furniture – Strength, durability and safety – Requirements for non-domestic seating

**3D model**
3D files of all products are available on the product pages on hem.com

**Always in stock**
We keep all our products in stock and ready to ship from our warehouses in the US and EU

**Walnut**
*Solid Walnut*

**Ash**
*Solid Ash*

**Samples**
We supply samples of all our material finishes, order them directly from hem.com/samples

**All Wood Stool Rocket**

Top view

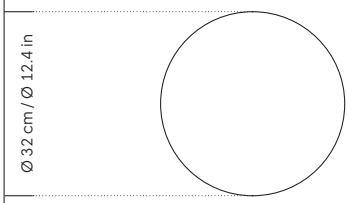


Front view

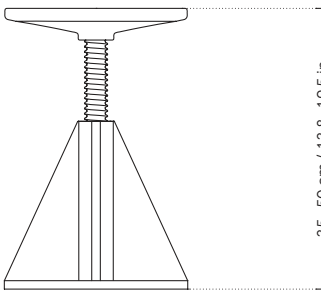


**All Wood Stool Bobbin**

Top view

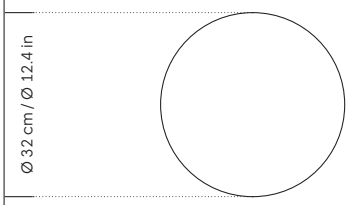


Front view

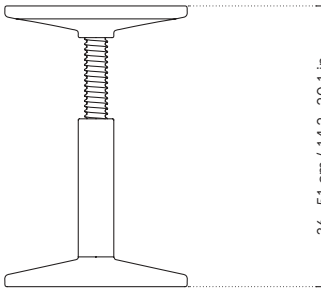

# All Wood Stools — Price List

| Product name | Finish | SKU | Retail Price SEK | List Price SEK (ex VAT) |
|---|---|---|---|---|
| **Curated Collection** | | | | |
| **All Wood Stool Bobbin** | Ash | 14151 | 6 659 | 5 417 |
| **All Wood Stool Bobbin** | Walnut | 14150 | 8 269 | 6 728 |
| **All Wood Stool Rocket** | Ash | 14149 | 7 579 | 6 164 |
| **All Wood Stool Rocket** | Walnut | 14148 | 9 189 | 7 475 |

# Bullnose Chair

*Design by Marco Campardo*

Dining just got more interesting. Gently rounded beech wood sections lend the Bullnose Chair, by Marco Campardo, an unexpectedly distinct quality: robust but soft, imposing yet inviting. It has a read-me-like-a-book construction of wooden parts, with each element carefully calibrated for strength and comfort. Deftly handled angles and subtly placed curves improve sitting ergonomics. As well as being the perfect perch for endless dinners, the Bullnose Chair brings visual interest to the table. Pair it with an understated surface for an interior pick-me-up, line them up banquet-style for architectural effect, or carefully position just one or two for small space impact. The Bullnose Chair is available in different shades of stained beech.

| Product name | Finish | SKU |
|---|---|---|
| **Bullnose Chair** | Natural Beech | 30735 |
| | Yellow Stained Beech | 31304 |
| | Black Stained Beech | 31303 |

**Material**
*Beech*
Fagus Sylvatica
Water-based lacquer

**Country of origin**
Poland

**Tests & certifications**
ANSI/BIFMA X5.4-2020 American National Standard for Office and Institutional Furnishings - Public and Lounge Seating

**Natural**
*Beech*



**Yellow Stained**
*Beech*

**Black Stained**
*Beech*

**Bullnose Chair**

Top view

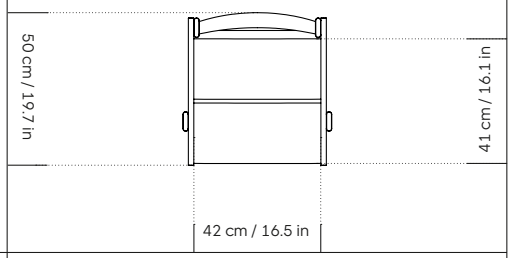


**Bullnose Chair**

Front view

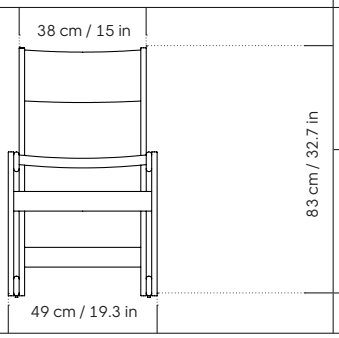


**Bullnose Chair**

Side view

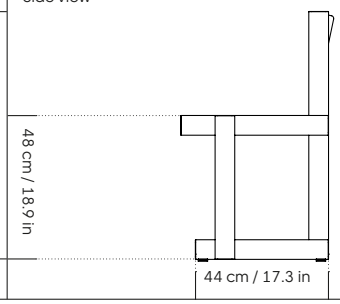

# Bullnose Lounge Chair

*Design by Marco Campardo*

Low-slung, deeply inclined, gently rounded, the Bullnose Lounge Chair demands you take a break. This solid wood chair shares all the same qualities as its dining sibling, but is altogether more, well, relaxed. The bullnose-shaped wooden sections that characterize this seating series by Marco Campardo are as distinct and impactful as ever, lending the chair a unique profile and making it extremely robust and sturdy. A deep and wide seat makes for comfortable lounging. Choose the Bullnose Lounge Chair for extensive loafing, long-play days and stylish lounge sessions. The Bullnose Chair is available in different shades of stained beech.

| Product name | Finish | SKU |
|---|---|---|
| **Bullnose Lounge Chair** | Natural Beech | 30736 |
| | Yellow Stained Beech | 31306 |
| | Black Stained Beech | 31305 |

**Material**
*Beech*
Fagus Sylvatica
Water-based lacquer

**Country of origin**
Poland

**Tests & certifications**
ANSI/BIFMA X5.4-2020 American National Standard for Office and Institutional Furnishings - Public and Lounge Seating

**Natural**
*Beech*



**Yellow Stained**
*Beech*

**Black Stained**
*Beech*

**Bullnose Lounge Chair**

Top view

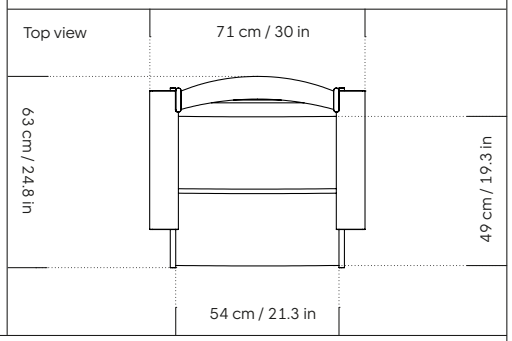


**Bullnose Lounge Chair**

Front view

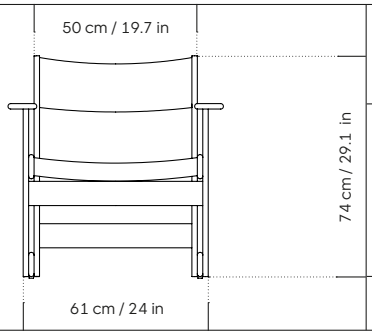


Side view

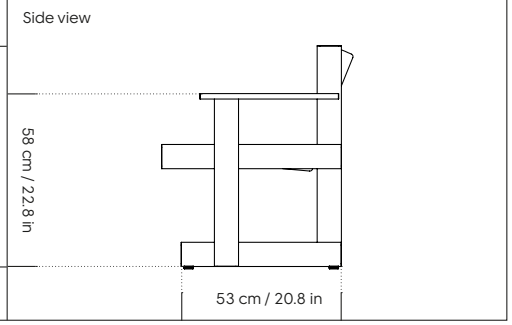

# Bullnose Chair Seat Pad

*Design by Marco Campardo*

| Product name | Finish | SKU |
|---|---|---|
| **Bullnose Chair Seat Pad** | Elmosoft 54035<br>Tiree 2223 | 30823<br>30822 |

**Upholstery**
*Elmosoft Leather*
by Elmo (Sweden)
Scandinavian Grain Leather, Semi-aniline
Lightfastness 6

*Tiree*
by Bute Fabrics (Scotland)
92% Pure New Wool, 8% Nylon
50,000 Martindale
Pilling 3-4
Lightfastness 5-8
Flame resistance EN 1021: Part 1 & 2,
BS 5852: Part 1 & 2 (Crib 5), US Cal. TB 117-2013

**Inside Material**
PU Foam

**Country of origin**
Poland

Elmosoft 54035

Tiree 2223

**Bullnose Chair Seat Pad**

Top view

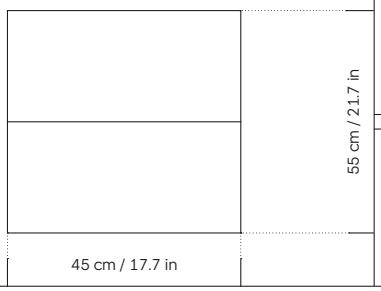


Side view

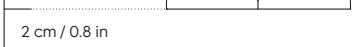

# Bullnose Lounge Chair Seat Pad

*Design by Marco Campardo*

| Product name | Finish | SKU |
|---|---|---|
| **Bullnose Lounge Chair Seat Pad** | Elmosoft 54035 | 30826 |
| | Tiree 2223 | 30825 |
| | Sheepskin Taupe Z579/03 | 30824 |

**Upholstery**
*Elmosoft Leather*
by Elmo (Sweden)
Scandinavian Grain Leather, Semi-aniline
Lightfastness 6

*Tiree*
by Bute Fabrics (Scotland)
92% Pure New Wool, 8% Nylon
50,000 Martindale
Pilling 3-4
Lightfastness 5-8
Flame resistance EN 1021: Part 1 & 2,
BS 5852: Part 1 & 2 (Crib 5), US Cal. TB 117-2013

*Sheepskin*
by Zinc Textile (Australia)
100% Sheepskin
90,000 Martindale
Flame resistance EN1021 Part 1 Upholstery, BS 5852 PART 1 IGN 0 Cigarette, BS 5852 PART 1 IGN 1 Match, BS 5852 PART 2 IGN 5 Crib Conctract Upholstery, NFPA260, CAL117

**Inside Material**
PU Foam

**Country of origin**
Poland

Elmosoft 54035

Tiree 2223

Sheepskin Taupe Z579/03

**Bullnose Lounge Chair Seat Pad**

Top view

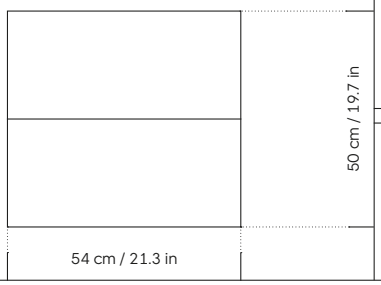


Side view

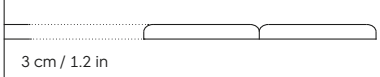

# Bullnose Chairs — Price List

| Product name | Finish | SKU | Retail Price SEK | List Price SEK (ex VAT) |
|---|---|---|---|---|
| **Curated Collection** | | | | |
| **Bullnose Chair** | Black | 31303 | 5 624 | 4 577 |
| **Bullnose Chair** | Black / Elmosoft Leather 54035 Seat Pad | 31666 | 8 027 | 6 521 |
| **Bullnose Chair** | Black / Swan Seat Pad | 31667 | 7 682 | 6 245 |
| **Bullnose Chair** | Natural | 30735 | 5 624 | 4 577 |
| **Bullnose Chair** | Natural / Elmosoft Leather 54035 Seat Pad | 31664 | 8 027 | 6 521 |
| **Bullnose Chair** | Natural / Swan Seat Pad | 31665 | 7 682 | 6 245 |
| **Bullnose Chair** | Yellow | 31304 | 5 624 | 4 577 |
| **Bullnose Chair** | Yellow / Elmosoft Leather 54035 Seat Pad | 31662 | 8 027 | 6 521 |
| **Bullnose Chair** | Yellow / Swan Seat Pad | 31663 | 7 682 | 6 245 |
| **Bullnose Dining Seat Pad** | Elmosoft Leather 54035 | 30823 | 2 404 | 1 955 |
| **Bullnose Dining Seat Pad** | Swan | 30822 | 2 059 | 1 679 |
| **Bullnose Lounge Chair** | Black | 31305 | 8 729 | 7 096 |
| **Bullnose Lounge Chair** | Black / Elmosoft Leather 54035 Seat Pad | 31675 | 12 857 | 10 454 |
| **Bullnose Lounge Chair** | Black / Swan Seat Pad | 31676 | 12 282 | 9 982 |
| **Bullnose Lounge Chair** | Black / Taupe Sheepskin Seat Pad | 31674 | 15 157 | 12 328 |
| **Bullnose Lounge Chair** | Natural | 30736 | 8 729 | 7 096 |
| **Bullnose Lounge Chair** | Natural / Elmosoft Leather 54035 Seat Pad | 31672 | 12 857 | 10 454 |
| **Bullnose Lounge Chair** | Natural / Swan Seat Pad | 31673 | 12 282 | 9 982 |
| **Bullnose Lounge Chair** | Natural / Taupe Sheepskin Seat Pad | 31671 | 15 157 | 12 328 |
| **Bullnose Lounge Chair** | Yellow | 31306 | 8 729 | 7 096 |
| **Bullnose Lounge Chair** | Yellow / Elmosoft Leather 54035 Seat Pad | 31669 | 12 857 | 10 454 |
| **Bullnose Lounge Chair** | Yellow / Swan Seat Pad | 31670 | 12 282 | 9 982 |
| **Bullnose Lounge Chair** | Yellow / Taupe Sheepskin Seat Pad | 31668 | 15 157 | 12 328 |
| **Bullnose Lounge Seat Pad** | Elmosoft Leather 54035 | 30826 | 4 129 | 3 358 |
| **Bullnose Lounge Seat Pad** | Swan | 30825 | 3 554 | 2 887 |
| **Bullnose Lounge Seat Pad** | Taupe Sheepskin | 30824 | 6 429 | 5 221 |
| **Graded-in Textile*** | | | | |
| **Bullnose Dining Seat Pad** | Grade 1 | | 1 254 | 1 024 |
| **Bullnose Dining Seat Pad** | Grade 2 | | 1 484 | 1 208 |
| **Bullnose Dining Seat Pad** | Grade 3 | | 1 599 | 1 300 |
| **Bullnose Dining Seat Pad** | Grade 4 | | 1 714 | 1 392 |
| **Bullnose Dining Seat Pad** | Grade 5 | | 1 944 | 1 576 |
| **Bullnose Dining Seat Pad** | Grade 6 | | 2 174 | 1 771 |
| **Bullnose Lounge Seat Pad** | Grade 1 | | 1 944 | 1 576 |
| **Bullnose Lounge Seat Pad** | Grade 2 | | 2 289 | 1 863 |
| **Bullnose Lounge Seat Pad** | Grade 3 | | 2 634 | 2 139 |
| **Bullnose Lounge Seat Pad** | Grade 4 | | 2 864 | 2 323 |
| **Bullnose Lounge Seat Pad** | Grade 5 | | 3 209 | 2 611 |
| **Bullnose Lounge Seat Pad** | Grade 6 | | 3 669 | 2 979 |

*Please make sure to check pro.hem.com for the most up to date information on finishes and stock availability.

# Chop Chair

*Design by Philippe Malouin*

The Chop Chair by Philippe Malouin is an evergreen design conceived for use in a range of public and private outdoor spaces. Beautifully proportioned, with subtle curvatures, it is intentionally simple, in both construction and style. Chop reimagines a classic slatted-chair archetype to create a silhouette that is immediately recognizable, yet pleasingly unknown. The idea for the design was influenced by Malouin's work in the art world, where he often utilizes hand-led industrial techniques to develop striking forms that accentuate the object's materiality. The Chop collection is cut, bent and welded from durable stainless steel, and is available in a raw, sandblasted or powder-coated colored finish. A design for all seasons, Chop is correctly weighted to resist wind, while still being light enough to move around and stack with ease.

**Color variants material**
*Stainless Steel*
Powder Coated

**Laminate / Stainless variant material**
*Stainless Steel*

**Product weight**
8 kg / 17.6 lb

**Country of origin**
Poland

**Tests & certifications**
EN 16139:2013 – L2: Extreme use - Furniture - Strength durability and safety - Requirements for non-domestic seating

ANSI/BIFMA X5.1-2017 American National Standard For Office Furnishings – General Purpose Office Chairs

**3D model**
3D files of all products are available on the product pages on hem.com

**Beige (RAL 1001)**
*Powder Coated Steel*

**Black Green (RAL 6012)**
*Powder Coated Steel*

**Grey White (RAL 9002)**
*Powder Coated Steel*

**Ultramarine Blue (RAL 5002)**
*Powder Coated Steel*

**Stainless Steel**
*Sandblasted*

**MTO**
Please refer to the price list or reach out to your local representative for our made-to-order options

**Chop Chair**

Front view

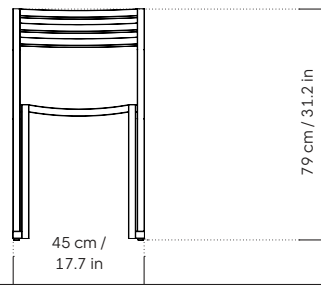


Side view

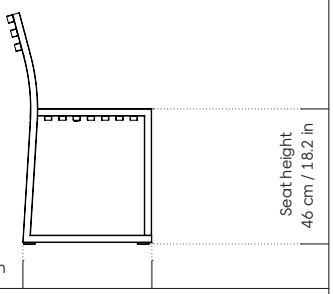


**Stackability**

Side view

Recommended max. stacking 6 pcs

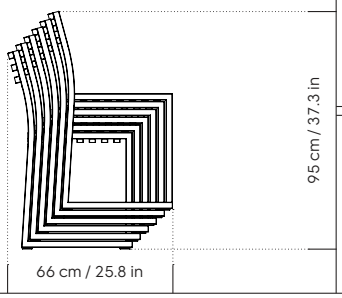


**Forward stacking**

Side view

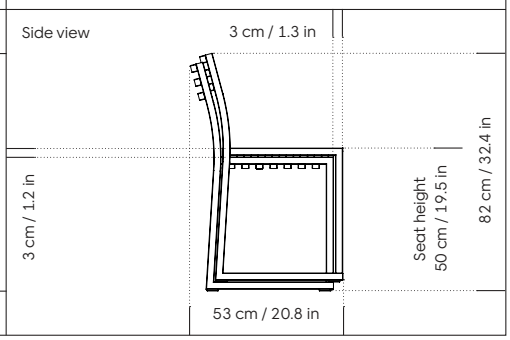

# Chop Bar Chair

*Design by Philippe Malouin*

The Chop Chair by Philippe Malouin is an evergreen design conceived for use in a range of public and private outdoor spaces. Beautifully proportioned, with subtle curvatures, it is intentionally simple, in both construction and style. Chop reimagines a classic slatted-chair archetype to create a silhouette that is immediately recognizable, yet pleasingly unknown. The idea for the design was influenced by Malouin's work in the art world, where he often utilizes hand-led industrial techniques to develop striking forms that accentuate the object's materiality. The Chop collection is cut, bent and welded from durable stainless steel, and is available in a raw, sandblasted or powder-coated colored finish. A design for all seasons, Chop is correctly weighted to resist wind, while still being light enough to move around and stack with ease.

**Color variants material**
*Stainless Steel*
Powder Coated

**Laminate / Stainless variant material**
*Stainless Steel*

**Product weight**
8 kg / 17.6 lb

**Country of origin**
Poland

**Tests & certifications**
EN 16139:2013 – L2: Extreme use - Furniture - Strength durability and safety - Requirements for non-domestic seating

ANSI/BIFMA X5.1-2017 American National Standard For Office Furnishings – General Purpose Office Chairs

**3D model**
3D files of all products are available on the product pages on hem.com

**Black Green (RAL 6012)**
*Powder Coated Steel*

**Stainless Steel**
*Sandblasted*

**MTO**
Please refer to the price list or reach out to your local representative for our made-to-order options

**Chop Bar Chair**

Front view

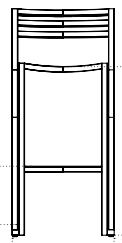


Side view

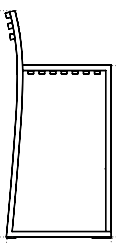

# Chop Counter Chair

*Design by Philippe Malouin*

The Chop Chair by Philippe Malouin is an evergreen design conceived for use in a range of public and private outdoor spaces. Beautifully proportioned, with subtle curvatures, it is intentionally simple, in both construction and style. Chop reimagines a classic slatted-chair archetype to create a silhouette that is immediately recognizable, yet pleasingly unknown. The idea for the design was influenced by Malouin's work in the art world, where he often utilizes hand-led industrial techniques to develop striking forms that accentuate the object's materiality. The Chop collection is cut, bent and welded from durable stainless steel, and is available in a raw, sandblasted or powder-coated colored finish. A design for all seasons, Chop is correctly weighted to resist wind, while still being light enough to move around and stack with ease.

**Color variants material**
*Stainless Steel*
Powder Coated

**Laminate / Stainless variant material**
*Stainless Steel*

**Product weight**
8 kg / 17.6 lb

**Country of origin**
Poland

**Tests & certifications**
EN 16139:2013 – L2: Extreme use - Furniture - Strength durability and safety - Requirements for non-domestic seating

ANSI/BIFMA X5.1-2017 American National Standard For Office Furnishings – General Purpose Office Chairs

**3D model**
3D files of all products are available on the product pages on hem.com

**Black Green (RAL 6012)**
*Powder Coated Steel*

**Stainless Steel**
*Sandblasted*

**MTO**
Please refer to the price list or reach out to your local representative for our made-to-order options

**Chop Counter Chair**

Front view

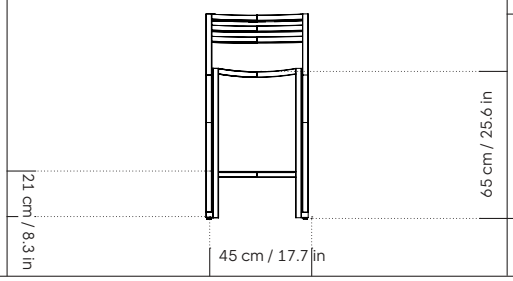


Side view

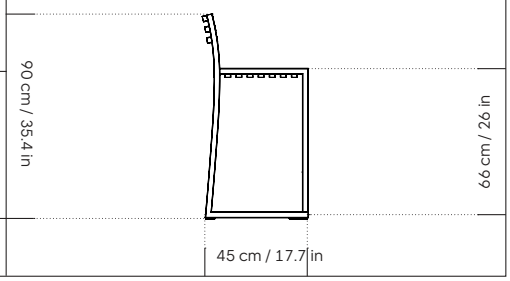

# Chop Seat Pad

*Design by Philippe Malouin*

Made from durable EVA foam with a velour backing, the Chop Seat Pad offers unparalleled comfort and support for all types of Chop Chairs, while the water-repellent fabric ensures resilience against the elements. Designed to perfectly mold to the Chop Chair's seat, installation is a breeze, transforming your chair into a haven of relaxation in minutes. Upgrade your outdoor experience with the Chop Seat Pad – a stylish, comfortable, and hassle-free solution for enhancing your Chop Chairs.

| Product name | Finish | SKU |
|---|---|---|
| **Chop Seat Pad** | Brown | 31420 |

**Color variants material**
*Sunbrella Solids*
EVA Foam

**Country of origin**
Sweden

**Brown**
*Sunbrella Solids*

**MTO**
Reach out to your local representative for the full selection of made-to-order options.

**Chop Seat Pad**

Top view

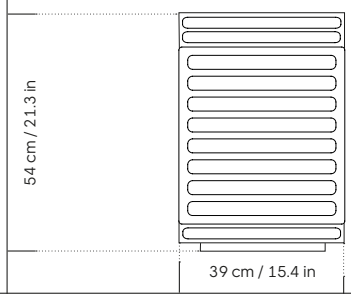


Side view

# Chop Chairs — Price List

| Product name | Finish | SKU | Retail Price SEK | List Price SEK (ex VAT) |
|---|---|---|---|---|
| **Curated Collection** | | | | |
| **Chop Bar Chair** | Black Green | 31307 | 5 854 | 4 761 |
| **Chop Bar Chair** | Sandblasted Stainless Steel | 31308 | 6 429 | 5 221 |
| **Chop Chair** | Beige | 30916 | 5 854 | 4 761 |
| **Chop Chair** | Black Green | 30912 | 5 854 | 4 761 |
| **Chop Chair** | Grey White | 30910 | 5 854 | 4 761 |
| **Chop Chair** | Stainless | 30815 | 6 199 | 5 037 |
| **Chop Chair** | Ultramarine Blue | 30914 | 5 854 | 4 761 |
| **Chop Chair (Set of 2)** | Beige | 30917 | 11 707 | 9 522 |
| **Chop Chair (Set of 2)** | Black Green | 30913 | 11 707 | 9 522 |
| **Chop Chair (Set of 2)** | Grey White | 30911 | 11 707 | 9 522 |
| **Chop Chair (Set of 2)** | Stainless | 30816 | 12 397 | 10 074 |
| **Chop Chair (Set of 2)** | Ultramarine Blue | 30915 | 11 707 | 9 522 |
| **Chop Counter Chair** | Black Green | 31309 | 5 854 | 4 761 |
| **Chop Counter Chair** | Sandblasted Stainless Steel | 31310 | 6 429 | 5 221 |
| **Chop Seat Pad** | Brown | 31420 | 1 484 | 1 208 |

# Experiment Lounge Chair

*Design by Yrjö Kukkapuro*

Timeless, bold, and as compelling today as the day it was created, the Experiment Chair was designed by celebrated Finnish designer Yrjö Kukkapuro in 1982. Its expressive, innovative design was realized during a period of intense productivity by Kukkapuro, then a leading figure of Functionalism. The chair is an icon of eighties design. It demonstrates all the ergonomic qualities and extraordinary structural detail Kukkapuro is famed for. And, importantly, it embodies a fearless postmodern aesthetic that hasn't lost any of its impact. In the Experiment Chair, Kukkapuro sought to add art to Functionalism, to satisfy romantic tastes alongside meeting essential needs. The result is startling, authentic, a hero of twentieth-century design. It has been Hem's privilege to work alongside Yrjö to reintroduce the Experiment Chair to a new generation. The updated Experiment Chair is faithful to the original, featuring the same decorative armrests; red symbolizing fire, green representing trees, and blue denoting waves on a lake. New upholstery options are available, and the chair features subtle resizing tailored to contemporary needs.

**Material**
*Elmosoft Leather*
by Elmo (Sweden)
Scandinavian Grain Leather, Semi-aniline
Lightfastness 6

*Steelcut 3*
by Kvadrat (UK)
90% New Wool, 10% Nylon
100,000 Martindale
Pilling 3-4, Lightfastness 6
EN 1021: Part 1 & 2, US Cal. TB 117-2013, BS 5852: Part 1
EU Ecolabel, Greenguard Gold

**Leg Material**
Steel
*Chrome*
Birch Plywood
Solid Beech
*Water-based lacquer*

**Inside Material**
PU Foam
Birch Plywood Structure

**Country of origin**
Poland

**Tests & certifications**
FSC mix, VOC Certified: M7.1/X7.1-2011 R2021;
SCS Indoor Advantage Gold.
EN 16139:2013 – L1: General Use – Furniture – Strength, durability and safety – Requirements for non-domestic seating

**Black Leather**
*Elmosoft Leather (99999)*

**Light Beige**
*Steelcut 3 (0240)*

**Black**
*Steelcut 3 (0190)*

**Green (Pantone 361 C)**
*Lacquered Wood*

**Blue (Pantone 7697 C)**
*Lacquered Wood*

**Black (Pantone Black 6 C)**
*Lacquered Wood*

**Red (Pantone 200 C)**
*Lacquered Wood*

**Chrome**
*Chrome Plated Steel*

**Experiment Lounge Chair 501**

Front view

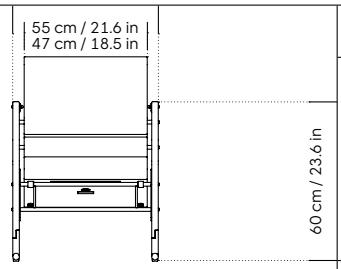


Side view

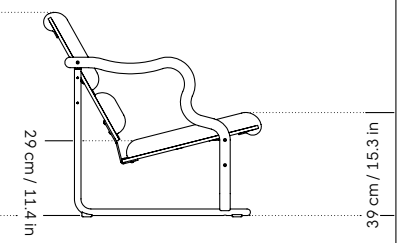


**Experiment Lounge Chair 502**

Front view

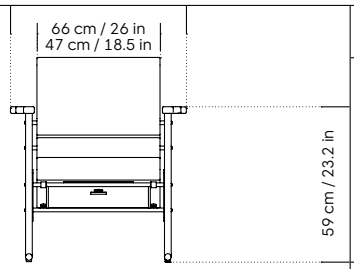


Side view

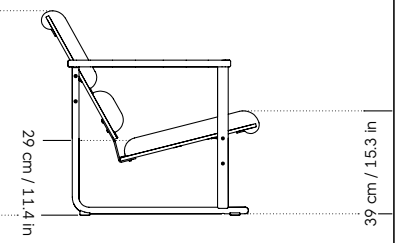


**Experiment Lounge Chair 503**

Front view

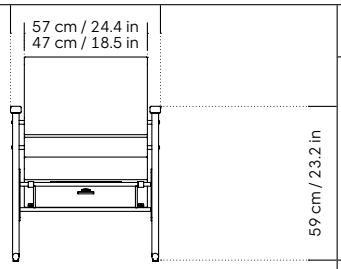


Side view

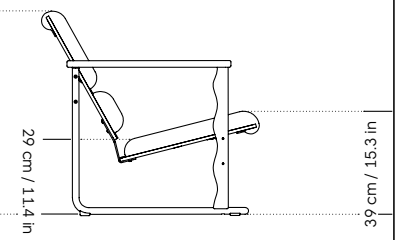


**Experiment Lounge Chair 501**

Top view

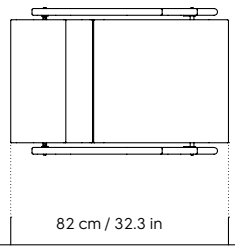


**Experiment Lounge Chair 502**

Top view

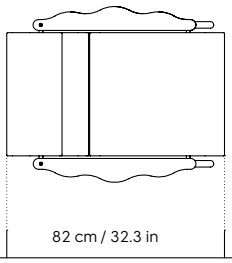


**Experiment Lounge Chair 503**

Top view

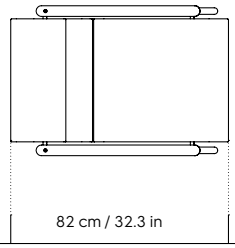

# Experiment Lounge Chair — Price List

| Product name | Finish | SKU | Retail Price SEK | List Price SEK (ex VAT) |
|---|---|---|---|---|
| **Curated Collection** | | | | |
| **Experiment Lounge Chair** | 501 / Green / Black | 30938 | 21 149 | 17 193 |
| **Experiment Lounge Chair** | 501 / Green / Black Leather | 30939 | 28 164 | 22 897 |
| **Experiment Lounge Chair** | 501 / Green / Light Beige | 30937 | 21 149 | 17 193 |
| **Experiment Lounge Chair** | 502 / Black / Black | 30942 | 21 149 | 17 193 |
| **Experiment Lounge Chair** | 502 / Black / Black Leather | 30943 | 28 164 | 22 897 |
| **Experiment Lounge Chair** | 502 / Black / Light Beige | 30941 | 21 149 | 17 193 |
| **Experiment Lounge Chair** | 502 / Blue / Black | 30946 | 21 149 | 17 193 |
| **Experiment Lounge Chair** | 502 / Blue / Black Leather | 30947 | 28 164 | 22 897 |
| **Experiment Lounge Chair** | 502 / Blue / Light Beige | 30945 | 21 149 | 17 193 |
| **Experiment Lounge Chair** | 503 / Red / Black | 30950 | 21 149 | 17 193 |
| **Experiment Lounge Chair** | 503 / Red / Black Leather | 30951 | 28 164 | 22 897 |
| **Experiment Lounge Chair** | 503 / Red / Light Beige | 30949 | 21 149 | 17 193 |
| **Graded-in Textile*** | | | | |
| **Experiment Lounge Chair** | Grade 1 | | 21 609 | 17 572 |
| **Experiment Lounge Chair** | Grade 2 | | 22 184 | 18 032 |
| **Experiment Lounge Chair** | Grade 3 | | 22 529 | 18 320 |
| **Experiment Lounge Chair** | Grade 4 | | 22 874 | 18 596 |
| **Experiment Lounge Chair** | Grade 5 | | 23 449 | 19 067 |
| **Experiment Lounge Chair** | Grade 6 | | 24 254 | 19 723 |

*Please make sure to check pro.hem.com for the most up to date information on finishes and stock availability.

# Great Sofa - Product Details

*Design by Philippe Malouin*

The Great Sofa lives up to its monumental name. Great in scale; more landscape than furniture, an expansive archipelago of soft upholstery upon which to retreat. Great in looks; the sofa broadcasts its relaxez-vous informality with loose-fit covers that adapt to your body, crumple and cosset - nothing is uptight or rigid about Great Sofa. Great Sofa excels in concept too; easy-to-fit-and-remove covers aid effortless cleaning and offer longevity. No tools are needed for assembly. Plus, our modular system facilitates endless configurations for laidback, feet-up luxury. Corners, islands, conversation pits welcome.

**Upholstery**
*Cifrado*
by Kvadrat/Sahco (Denmark)
42% recycled polyester, 27% viscose, 24% recycled cotton, 7% linen
30,000 Martindale
Pilling 5
Lightfastness 5-6
Flame resistance EN 1021: Part 1 & 2, US Cal. TB 117-2013, IMO 2010 FTP Code Part 8

*Safire*
by Kvadrat/Sahco (Denmark)
43% viscose, 17% polyacrylic, 15% new wool, 9% cotton, 8% polyester, 8% linen
40,000 Martindale
Pilling 3
Lightfastness 5-6
Flame resistance BS 5852: Part 1, EN 1021: Part 1 & 2, US Cal. TB 117-2013, IMO 2010 FTP Code Part 8

*Autumn*
by Kvadrat (Denmark)
100% Recycled Polyester
50,000 Martindale
Pilling 4-5
Lightfastness 6-7
Flame resistance ASTM E 84 Adhered, ASTM E84 Class A Unadhered, EN 1021: Part 1 & 2, IMO 2010 FTP Code Part 8, US Cal. TB 117-2013

**Leg material**
*Birch wood*
*Painted*

**Inside material**
PU foam
Wooden structure

**Country of origin**
Lithuania

**Tests & certifications**
EN 16139:2013 – L2: Extreme use – Furniture Strength, durability and safety – Requirements for non-domestic

**Product accessory**
Great Cushion

**3D model**
3D files of all products are available on the product pages on hem.com

**Cifrado**
*0381*


**Cifrado**
*0111*

**Cifrado**
*0901*

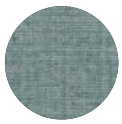
**Cifrado**
*0741*

**Safire**
*0003*

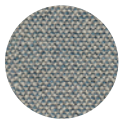
**Safire**
*0012*

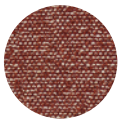
**Safire**
*0013*

**Safire**
*0014*

**Safire**
*0007*

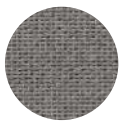
**Autumn**
*0131*

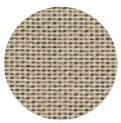
**Autumn**
*0221*

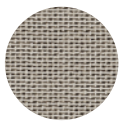
**Autumn**
*0331*

**Autumn**
*0971*

**Autumn**
*0361*

**Samples**
We supply samples of our material finishes. You can order them directly from hem.com/samples

**Graded-in Textile and Made-To-Order**
Reach out to your local representative for the full selection of made-to-order options.

**Great Sofa Ottoman**

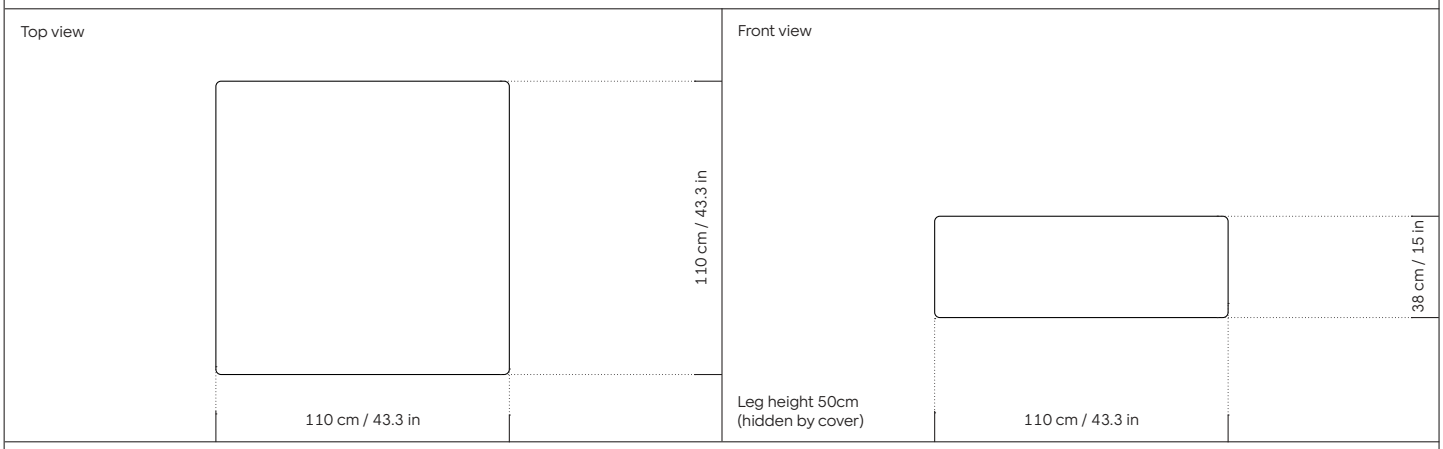


**Great Sofa Extension Module**

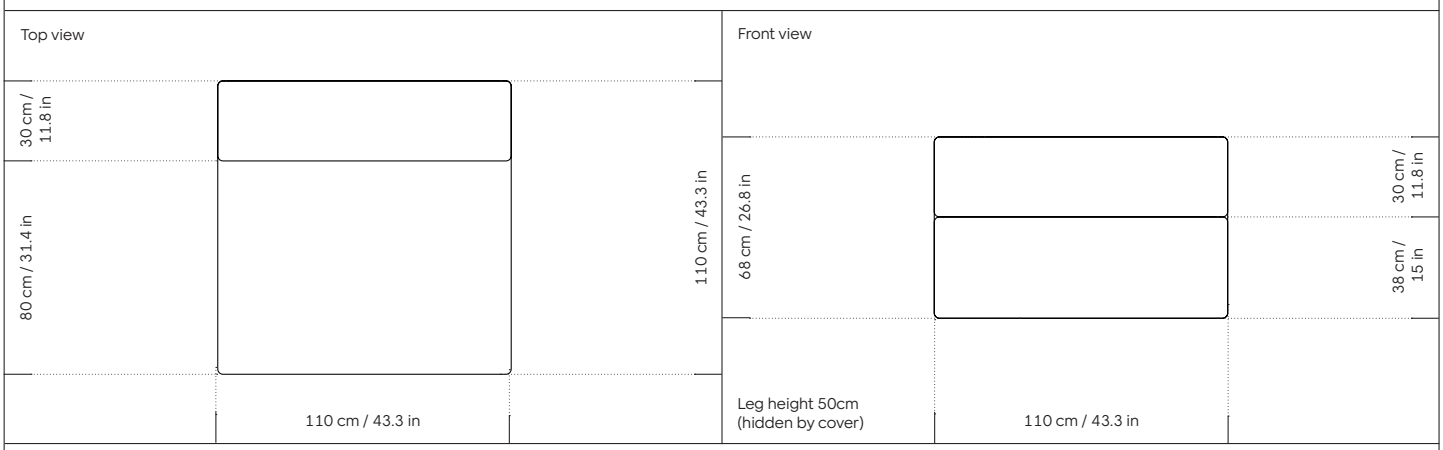


**Great Sofa Extension Module Narrow**

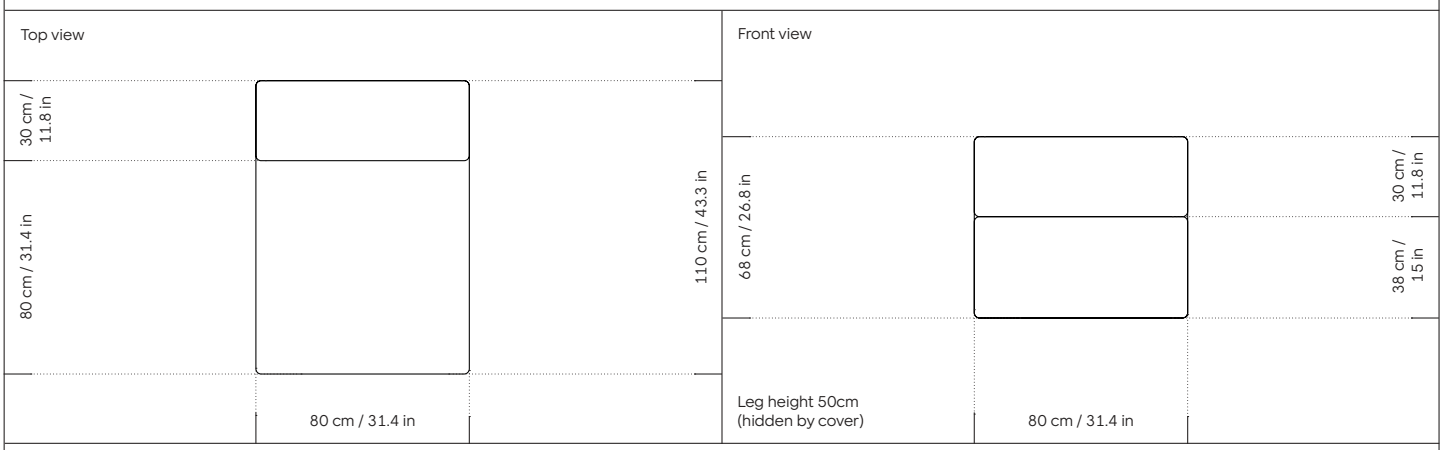


**Great Sofa Corner Module**

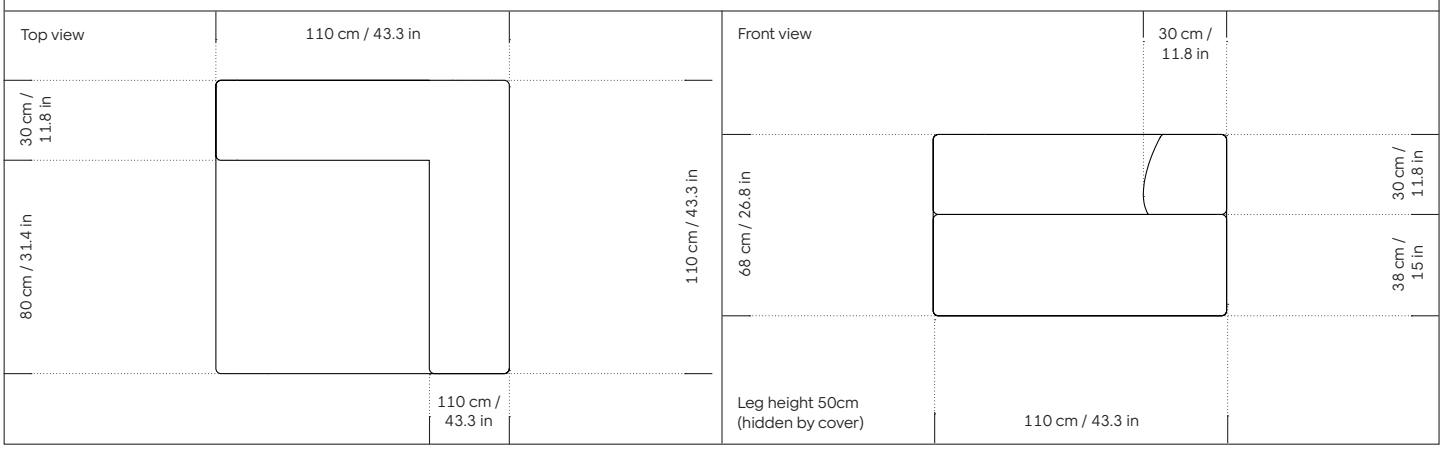

# Great Sofa - Variant Overview

This is a modular product that can be configured freely to fit your needs. All variants consist of either the Great Sofa Corner Module, Great Sofa Extension Module, Great Sofa Extension Module Narrow or Great Sofa Ottoman.
For custom configurations reach out to info@hem.com for assistance.

Great Sofa Ottoman

Great Sofa Extension Module

Great Sofa Extension Module Narrow

Great Sofa Corner Module

Great 2-seater Sofa

Great 3-seater Sofa

Great 3-seater Sofa Narrow

Great 3-seater Sofa Corner Right

Great 3-seater Sofa Corner Left

Great 3-seater Sofa Chaise Right

Great 3-seater Sofa Chaise Left

Great 3-seater Sofa Narrow Corner Right

Great 3-seater Sofa Narrow Corner Left

Great 3-Seater Sofa Narrow Chaise Right

Great 3-seater Sofa Narrow Chaise Left

# Great — Price List

| Product name | Finish | SKU | Retail Price SEK | List Price SEK (ex VAT) |
|---|---|---|---|---|
| **Curated Collection** | | | | |
| **Great 2-seater Sofa** | Autumn 0131 | 92383 | 49 324 | 40 101 |
| **Great 2-seater Sofa** | Autumn 0221 | 92384 | 49 324 | 40 101 |
| **Great 2-seater Sofa** | Autumn 0331 | 92385 | 49 324 | 40 101 |
| **Great 2-seater Sofa** | Autumn 0361 | 20881 | 49 324 | 40 101 |
| **Great 2-seater Sofa** | Autumn 0971 | 92386 | 49 324 | 40 101 |
| **Great 2-seater Sofa** | Cifrado 0111 | 92387 | 73 934 | 60 111 |
| **Great 2-seater Sofa** | Cifrado 0381 | 20899 | 73 934 | 60 111 |
| **Great 2-seater Sofa** | Cifrado 0741 | 20971 | 73 934 | 60 111 |
| **Great 2-seater Sofa** | Cifrado 0901 | 92388 | 73 934 | 60 111 |
| **Great 2-seater Sofa** | Safire 0003 | 92389 | 68 069 | 55 338 |
| **Great 2-seater Sofa** | Safire 0007 | 20912 | 68 069 | 55 338 |
| **Great 2-seater Sofa** | Safire 0012 | 92390 | 68 069 | 55 338 |
| **Great 2-seater Sofa** | Safire 0013 | 92392 | 68 069 | 55 338 |
| **Great 2-seater Sofa** | Safire 0014 | 92391 | 68 069 | 55 338 |
| **Great 3-seater Sofa** | Autumn 0131 | 92403 | 70 369 | 57 213 |
| **Great 3-seater Sofa** | Autumn 0221 | 92404 | 70 369 | 57 213 |
| **Great 3-seater Sofa** | Autumn 0331 | 92405 | 70 369 | 57 213 |
| **Great 3-seater Sofa** | Autumn 0361 | 20882 | 70 369 | 57 213 |
| **Great 3-seater Sofa** | Autumn 0971 | 92406 | 70 369 | 57 213 |
| **Great 3-seater Sofa** | Cifrado 0111 | 92407 | 105 559 | 85 825 |
| **Great 3-seater Sofa** | Cifrado 0381 | 20900 | 105 559 | 85 825 |
| **Great 3-seater Sofa** | Cifrado 0741 | 20970 | 105 559 | 85 825 |
| **Great 3-seater Sofa** | Cifrado 0901 | 92408 | 105 559 | 85 825 |
| **Great 3-seater Sofa** | Safire 0003 | 92409 | 93 254 | 75 820 |
| **Great 3-seater Sofa** | Safire 0007 | 20915 | 93 254 | 75 820 |
| **Great 3-seater Sofa** | Safire 0012 | 92410 | 93 254 | 75 820 |
| **Great 3-seater Sofa** | Safire 0013 | 92412 | 93 254 | 75 820 |
| **Great 3-seater Sofa** | Safire 0014 | 92411 | 93 254 | 75 820 |
| **Great 3-seater Sofa Chaise Left** | Autumn 0131 | 92423 | 86 814 | 70 576 |
| **Great 3-seater Sofa Chaise Left** | Autumn 0221 | 92424 | 86 814 | 70 576 |
| **Great 3-seater Sofa Chaise Left** | Autumn 0331 | 92425 | 86 814 | 70 576 |
| **Great 3-seater Sofa Chaise Left** | Autumn 0361 | 20886 | 86 814 | 70 576 |
| **Great 3-seater Sofa Chaise Left** | Autumn 0971 | 92426 | 86 814 | 70 576 |
| **Great 3-seater Sofa Chaise Left** | Cifrado 0111 | 92427 | 132 584 | 107 790 |
| **Great 3-seater Sofa Chaise Left** | Cifrado 0381 | 20901 | 132 584 | 107 790 |
| **Great 3-seater Sofa Chaise Left** | Cifrado 0741 | 20976 | 132 584 | 107 790 |
| **Great 3-seater Sofa Chaise Left** | Cifrado 0901 | 92428 | 132 584 | 107 790 |
| **Great 3-seater Sofa Chaise Left** | Safire 0003 | 92429 | 117 289 | 95 358 |
| **Great 3-seater Sofa Chaise Left** | Safire 0007 | 20916 | 117 289 | 95 358 |
| **Great 3-seater Sofa Chaise Left** | Safire 0012 | 92430 | 117 289 | 95 358 |
| **Great 3-seater Sofa Chaise Left** | Safire 0013 | 92432 | 117 289 | 95 358 |
| **Great 3-seater Sofa Chaise Left** | Safire 0014 | 92431 | 117 289 | 95 358 |
| **Great 3-seater Sofa Chaise Right** | Autumn 0131 | 92443 | 86 814 | 70 576 |
| **Great 3-seater Sofa Chaise Right** | Autumn 0221 | 92444 | 86 814 | 70 576 |
| **Great 3-seater Sofa Chaise Right** | Autumn 0331 | 92445 | 86 814 | 70 576 |
| **Great 3-seater Sofa Chaise Right** | Autumn 0361 | 20887 | 86 814 | 70 576 |
| **Great 3-seater Sofa Chaise Right** | Autumn 0971 | 92446 | 86 814 | 70 576 |
| **Great 3-seater Sofa Chaise Right** | Cifrado 0111 | 92447 | 132 584 | 107 790 |
| **Great 3-seater Sofa Chaise Right** | Cifrado 0381 | 20902 | 132 584 | 107 790 |
| **Great 3-seater Sofa Chaise Right** | Cifrado 0741 | 20977 | 132 584 | 107 790 |
| **Great 3-seater Sofa Chaise Right** | Cifrado 0901 | 92448 | 132 584 | 107 790 |
| **Great 3-seater Sofa Chaise Right** | Safire 0003 | 92449 | 117 289 | 95 358 |
| **Great 3-seater Sofa Chaise Right** | Safire 0007 | 20917 | 117 289 | 95 358 |
| **Great 3-seater Sofa Chaise Right** | Safire 0012 | 92450 | 117 289 | 95 358 |
| **Great 3-seater Sofa Chaise Right** | Safire 0013 | 92452 | 117 289 | 95 358 |
| **Great 3-seater Sofa Chaise Right** | Safire 0014 | 92451 | 117 289 | 95 358 |
| **Great 3-seater Sofa Corner Left** | Autumn 0131 | 92463 | 90 379 | 73 474 |
| **Great 3-seater Sofa Corner Left** | Autumn 0221 | 92464 | 90 379 | 73 474 |
| **Great 3-seater Sofa Corner Left** | Autumn 0331 | 92465 | 90 379 | 73 474 |
| **Great 3-seater Sofa Corner Left** | Autumn 0361 | 20890 | 90 379 | 73 474 |
| **Great 3-seater Sofa Corner Left** | Autumn 0971 | 92466 | 90 379 | 73 474 |
| **Great 3-seater Sofa Corner Left** | Cifrado 0111 | 92467 | 136 149 | 110 688 |
| **Great 3-seater Sofa Corner Left** | Cifrado 0381 | 20903 | 136 149 | 110 688 |
| **Great 3-seater Sofa Corner Left** | Cifrado 0741 | 20980 | 136 149 | 110 688 |
| **Great 3-seater Sofa Corner Left** | Cifrado 0901 | 92468 | 136 149 | 110 688 |
| **Great 3-seater Sofa Corner Left** | Safire 0003 | 92469 | 123 154 | 100 131 |
| **Great 3-seater Sofa Corner Left** | Safire 0007 | 20918 | 123 154 | 100 131 |
| **Great 3-seater Sofa Corner Left** | Safire 0012 | 92470 | 123 154 | 100 131 |
| **Great 3-seater Sofa Corner Left** | Safire 0013 | 92472 | 123 154 | 100 131 |
| **Great 3-seater Sofa Corner Left** | Safire 0014 | 92471 | 123 154 | 100 131 |

# Hai Lounge Chair

*Design by Luca Nichetto*

The Hai Chair does everything a classic armchair does and more. Luca Nichetto's design is strong—very strong—ergonomic, and handsome, but smart about it. A lightweight metal skeleton is covered in molded foam and soft, inviting textile for maximum comfort. Although sleek and contemporary, the wide arms and high back embrace the sitter in a way that inspires total, classic relaxation. The Hai Chair's sleek looks can be admired from every angle, even from behind, making this an armchair that nobody should push into a corner.

**Upholstery**
*Uniform Mélange*
by Febrik x Kvadrat (Netherlands)
68% New wool, 22% Nylon, 10% Polyester
100,000 Martindale
Pilling 4, Lightfastness 6
Flame resistance EN 1021: Part 1 & 2, BS 5852: Part 1, US Cal. TB 117

*Bute Storr*
by Bute Fabrics (Scotland)
97 % Pure New Wool, 3% Nylon
65000 Martindale
Pilling 4-5, Lightfastness 5
Flame resistance IMO FTP Code(2010) Annex 1, Part 8, BS 5852: Part 1 & 2 (Crib 5), US Cal. TB 121

*Steelcut 3*
by Kvadrat (UK)
90% New Wool, 10% Nylon
100,000 Martindale
Pilling 3-4, Lightfastness 6
EN 1021: Part 1 & 2, US Cal. TB 117-2013, BS 5852: Part 1

*Cura*
by Gabriel (Denmark)
98% Recycled Polyester, 2% Polyester
100,000 Martindale
Pilling 4-5; Lightfastness 5-8
Flame resistance EN 1021: Part 1 & 2, US Cal. TB 117-2013

*Sera*
by Rohi (Germany)
94% Virgin Wool, 6% Polyamide
122,000 Martindale
Pilling 4-5
Lightfastness 5-8
Flame resistance EN 1021: Part 1 & 2, BS 5852: Part 1 & 2 (Crib 5), US Cal. TB 117

**Leg material**
*Powder Coated Steel*
*Brushed Stainless Steel*

**Inside material**
PU foam
Steel structure

**Country of origin**
Lithuania

**Tests & certifications**
EN 16139:2013 – L2: Extreme use – Furniture – Strength, durability and safety – Requirements for non-domestic seating

**Product accessory**
Hai Ottoman

**Samples**
We supply samples of our material finishes. You can order them directly from hem.com/samples

**Graded-in Textile and Made-To-Order**
Please refer to the price list or reach out to your local representative for our made-to-order options

**Ink**
*Uniform Mélange (0793)*

**Pink**
*Uniform Mélange (0623)*

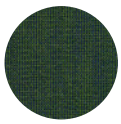
**Peacock**
*Uniform Mélange (0983)*

**Liquorice**
*Uniform Mélange (0353)*

**Shell**
*Uniform Mélange (0103)*

**Charcoal**
*Uniform Mélange (0193)*

**Eggshell**
*Bute Storr Eggshell*

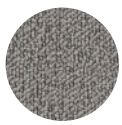
**Pebble**
*Bute Storr Pebble*

**Sawdust**
*Bute Storr Sawdust*

**Burgundy**
*Steelcut 3 (0682)*

**Light Beige**
*Steelcut 3 (0240)*

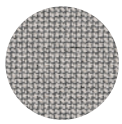
**60112**
*Cura*

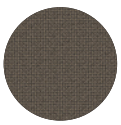
**61169**
*Cura*

**60019**
*Cura*

**Rosewood**
*Sera*

**Pine**
*Sera (Hem exclusive)*

**Black (RAL 9005)**
*Powder Coated Steel*

*Brushed Stainless Steel*

**3D model**
3D files of all products are available on the product pages on hem.com

**Hai Lounge Chair**

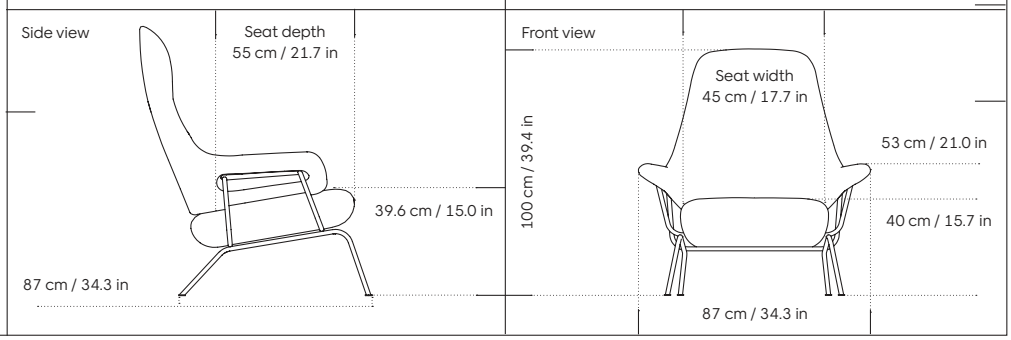

# Hai Ottoman

*Design by Luca Nichetto*

The Hai Chair does everything a classic armchair does and more. Luca Nichetto's design is strong—very strong—ergonomic, and handsome, but smart about it. A lightweight metal skeleton is covered in molded foam and soft, inviting textile for maximum comfort. Although sleek and contemporary, the wide arms and high back embrace the sitter in a way that inspires total, classic relaxation. The Hai Chair's sleek looks can be admired from every angle, even from behind, making this an armchair that nobody should push into a corner.

**Upholstery**
*Uniform Mélange*
by Febrik x Kvadrat (Netherlands)
68% New wool, 22% Nylon, 10% Polyester
100,000 Martindale
Pilling 4, Lightfastness 6
Flame resistance EN 1021: Part 1 & 2, BS 5852: Part 1, US Cal. TB 117

*Bute Storr*
by Bute Fabrics (Scotland)
97 % Pure New Wool, 3% Nylon
65000 Martindale
Pilling 4-5, Lightfastness 5
Flame resistance IMO FTP Code(2010) Annex 1, Part 8, BS 5852: Part 1 & 2 (Crib 5), US Cal. TB 121

*Steelcut 3*
by Kvadrat (UK)
90% New Wool, 10% Nylon
100,000 Martindale
Pilling 3-4, Lightfastness 6
EN 1021: Part 1 & 2, US Cal. TB 117-2013, BS 5852: Part 1

*Cura*
by Gabriel (Denmark)
98% Recycled Polyester, 2% Polyester
100,000 Martindale
Pilling 4-5; Lightfastness 5-8
Flame resistance EN 1021: Part 1 & 2, US Cal. TB 117-2013

*Sera*
by Rohi (Germany)
94% Virgin Wool, 6% Polyamide
122,000 Martindale
Pilling 4-5
Lightfastness 5-8
Flame resistance EN 1021: Part 1 & 2, BS 5852: Part 1 & 2 (Crib 5), US Cal. TB 117

**Leg material**
*Powder Coated Steel*
*Brushed Stainless Steel*

**Inside material**
PU foam
Wooden structure

**Country of origin**
Lithuania

**Tests & certifications**
EN 16139:2013 – L2: Extreme use – Furniture – Strength, durability and safety – Requirements for non-domestic seating

**Product accessory**
Hai Lounge Chair

**Samples**
We supply samples of our material finishes. You can order them directly from hem.com/samples

**Graded-in Textile and Made-To-Order**
Please refer to the price list or reach out to your local representative for our made-to-order options

**Ink**
*Uniform Mélange (0793)*

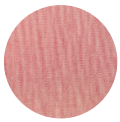

**Pink**
*Uniform Mélange (0623)*

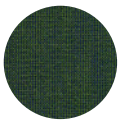

**Peacock**
*Uniform Mélange (0983)*

**Liquorice**
*Uniform Mélange (0353)*

**Shell**
*Uniform Mélange (0103)*

**Charcoal**
*Uniform Mélange (0193)*

**Eggshell**
*Bute Storr Eggshell*

**Pebble**
*Bute Storr Pebble*

**Sawdust**
*Bute Storr Sawdust*

**Burgundy**
*Steelcut 3 (0682)*

**Light Beige**
*Steelcut 3 (0240)*

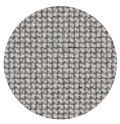

**60112**
*Cura*

**61169**
*Cura*

**60019**
*Cura*

**Rosewood**
*Sera*

**Pine**
*Sera (Hem exclusive)*

**Black (RAL 9005)**
*Powder Coated Steel*

*Brushed Stainless Steel*

**3D model**
3D files of all products are available on the product pages on hem.com

**Hai Ottoman**

Top view

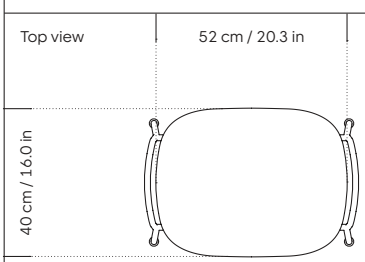


Front view

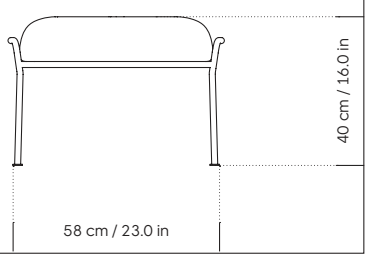

# Hai Lounge Chair — Price List

| Product name | Finish | SKU | Retail Price SEK | List Price SEK (ex VAT) |
|---|---|---|---|---|
| **Curated Collection** | | | | |
| **Hai Lounge Chair** | Burgundy | 31015 | 22 299 | 18 124 |
| **Hai Lounge Chair** | Charcoal | 30558 | 25 289 | 20 562 |
| **Hai Lounge Chair** | Cura 60019/Black | 31955 | 20 114 | 16 353 |
| **Hai Lounge Chair** | Cura 60112/Black | 31953 | 20 114 | 16 353 |
| **Hai Lounge Chair** | Cura 61169/Black | 31954 | 20 114 | 16 353 |
| **Hai Lounge Chair** | Eggshell | 30515 | 27 589 | 22 425 |
| **Hai Lounge Chair** | Ink | 30004 | 25 289 | 20 562 |
| **Hai Lounge Chair** | Licorice | 30151 | 25 289 | 20 562 |
| **Hai Lounge Chair** | Light Beige | 31017 | 22 299 | 18 124 |
| **Hai Lounge Chair** | Peacock | 30006 | 25 289 | 20 562 |
| **Hai Lounge Chair** | Pebble | 30516 | 27 589 | 22 425 |
| **Hai Lounge Chair** | Pine | 93005 | 24 139 | 19 631 |
| **Hai Lounge Chair** | Pink | 30152 | 25 289 | 20 562 |
| **Hai Lounge Chair** | Rosewood | 93009 | 24 139 | 19 631 |
| **Hai Lounge Chair** | Sawdust | 30517 | 27 589 | 22 425 |
| **Hai Lounge Chair** | Shell | 30061 | 25 289 | 20 562 |
| **Hai Lounge Chair** | Storr 612/Brushed Stainless | 31751 | 31 039 | 25 231 |
| **Hai Lounge Chair** | Storr 1501/Brushed Stainless | 31754 | 31 039 | 25 231 |
| **Hai Lounge Chair** | Storr 3405/Brushed Stainless | 31753 | 31 039 | 25 231 |
| **Hai Lounge Chair + Ottoman** | Burgundy | 31290 | 27 002 | 21 954 |
| **Hai Lounge Chair + Ottoman** | Charcoal | 20358 | 30 222 | 24 576 |
| **Hai Lounge Chair + Ottoman** | Cura 60019/Black | 31961 | 24 472 | 19 895 |
| **Hai Lounge Chair + Ottoman** | Cura 60112/Black | 31959 | 24 472 | 19 895 |
| **Hai Lounge Chair + Ottoman** | Cura 61169/Black | 31960 | 24 472 | 19 895 |
| **Hai Lounge Chair + Ottoman** | Eggshell | 20265 | 32 867 | 26 726 |
| **Hai Lounge Chair + Ottoman** | Ink | 20033 | 30 222 | 24 576 |
| **Hai Lounge Chair + Ottoman** | Licorice | 20097 | 30 337 | 24 668 |
| **Hai Lounge Chair + Ottoman** | Light Beige | 31291 | 27 002 | 21 954 |
| **Hai Lounge Chair + Ottoman** | Peacock | 20032 | 30 222 | 24 576 |
| **Hai Lounge Chair + Ottoman** | Pebble | 20266 | 32 867 | 26 726 |
| **Hai Lounge Chair + Ottoman** | Pine | 93121 | 28 957 | 23 541 |
| **Hai Lounge Chair + Ottoman** | Pink | 20098 | 30 222 | 24 576 |
| **Hai Lounge Chair + Ottoman** | Rosewood | 93125 | 28 957 | 23 541 |
| **Hai Lounge Chair + Ottoman** | Sawdust | 20267 | 32 867 | 26 726 |
| **Hai Lounge Chair + Ottoman** | Shell | 20035 | 30 222 | 24 576 |
| **Hai Lounge Chair + Ottoman** | Storr 612/Brushed Stainless | 31763 | 39 077 | 31 775 |
| **Hai Lounge Chair + Ottoman** | Storr 1501/Brushed Stainless | 31765 | 39 077 | 31 775 |
| **Hai Lounge Chair + Ottoman** | Storr 3405/Brushed Stainless | 31764 | 39 077 | 31 775 |
| **Hai Ottoman** | Burgundy | 31016 | 4 704 | 3 830 |
| **Hai Ottoman** | Charcoal | 30559 | 4 934 | 4 014 |
| **Hai Ottoman** | Cura 60019/Black | 31958 | 4 359 | 3 542 |
| **Hai Ottoman** | Cura 60112/Black | 31956 | 4 359 | 3 542 |
| **Hai Ottoman** | Cura 61169/Black | 31957 | 4 359 | 3 542 |
| **Hai Ottoman** | Eggshell | 30518 | 5 279 | 4 290 |
| **Hai Ottoman** | Ink | 30005 | 4 934 | 4 014 |
| **Hai Ottoman** | Licorice | 30153 | 5 049 | 4 106 |
| **Hai Ottoman** | Light Beige | 31018 | 4 704 | 3 830 |
| **Hai Ottoman** | Peacock | 30007 | 4 934 | 4 014 |
| **Hai Ottoman** | Pebble | 30519 | 5 279 | 4 290 |
| **Hai Ottoman** | Pine | 93063 | 4 819 | 3 922 |
| **Hai Ottoman** | Pink | 30154 | 4 934 | 4 014 |
| **Hai Ottoman** | Rosewood | 93067 | 4 819 | 3 922 |
| **Hai Ottoman** | Sawdust | 30520 | 5 279 | 4 290 |
| **Hai Ottoman** | Shell | 30062 | 4 934 | 4 014 |
| **Hai Ottoman** | Storr 612/Brushed Stainless | 31757 | 8 039 | 6 532 |
| **Hai Ottoman** | Storr 1501/Brushed Stainless | 31759 | 8 039 | 6 532 |
| **Hai Ottoman** | Storr 3405/Brushed Stainless | 31758 | 8 039 | 6 532 |
| **Graded-in Textile*** | | | | |
| **Hai Lounge Chair** | Grade 1 | | 23 564 | 19 159 |
| **Hai Lounge Chair** | Grade 2 | | 24 484 | 19 907 |
| **Hai Lounge Chair** | Grade 3 | | 25 174 | 20 470 |
| **Hai Lounge Chair** | Grade 4 | | 25 749 | 20 930 |
| **Hai Lounge Chair** | Grade 5 | | 26 669 | 21 678 |
| **Hai Lounge Chair** | Grade 6 | | 27 819 | 22 621 |



*Please make sure to check pro.hem.com for the most up to date information on finishes and stock availability.

# Hai Lounge Chair — Price List

| Product name | Finish | SKU | Retail Price SEK | List Price SEK (ex VAT) |
|---|---|---|---|---|
| **Graded-in Textile*** | | | | |
| **Hai Ottoman** | Grade 1 | | 4 704 | 3 830 |
| **Hai Ottoman** | Grade 2 | | 4 934 | 4 014 |
| **Hai Ottoman** | Grade 3 | | 5 049 | 4 106 |
| **Hai Ottoman** | Grade 4 | | 5 164 | 4 198 |
| **Hai Ottoman** | Grade 5 | | 5 394 | 4 382 |
| **Hai Ottoman** | Grade 6 | | 5 739 | 4 669 |

*Please make sure to check pro.hem.com for the most up to date information on finishes and stock availability.

# Hunk Lounge Chair with Armrests

*Design by Kwangho Lee*

The elemental block-like form of the Hunk armchair is especially characteristic of designer Kwangho Lee. In fact, the Hunk Chair is extra in every way. With exaggerated proportions, a profile so chunky it would make The Flintstones blush, and a ground-breaking construction made entirely from natural materials, Hunk is a whole lot of easy seating and conscientious furniture design. Although geometric in form, the chair's deep natural upholstery is made for melting into - natural latex and coco mat provide extreme cushioning whilst a fine bouclé textile creates a super-soft finish. Hunk is destined for lounging greatness.

**Upholstery**
*Tiree*
by Bute Fabrics (Scotland)
92% Pure New Wool, 8% Nylon
50,000 Martindale
Pilling 3-4
Lightfastness 5-8
Flame resistance EN 1021: Part 1 & 2, BS 5852: Part 1 & 2 (Crib 5), US Cal. TB 117-2013

*Amdal*
by Gudbrandsdalen Uldvarefabrik (Norway)
70% Virgin Wool, 30% Viscose
100,000 Martindale
Pilling 4
Lightfastness 5-7
Flame resistance EN 1021: Part 1 & 2, BS 5852: Part 1 & 2 (Crib 5), US Cal. TB 117-2013

*Ingrid*
by Dedar (Italy)
49% Polyester Trevira CS Recycled, 46% PES FR, 5% PES FR Recycled
70,000 Martindale
Flame resistance Italy Class 1, France M1, NFPA 260, UK BS5852 CIGAR. TEST, UK BS5852 CIG/MATCH, US Cal. TB 117-2013

**Inside material**
Wooden Structure
Latex Foam
Cocomat
Wool

**Country of origin**
Germany

**3D model**
3D files of all products are available on the product pages on hem.com

**Swan**
*Tiree*

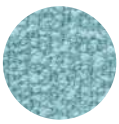

**Icicle**
*Tiree*

**Chocolate Brown**
*Tiree*

**Beige**
*Amdal*

**Checkered Black/White**
*Ingrid*

**Samples**
We supply samples of our material finishes. You can order them directly from hem.com/samples

**Graded-in Textile and Made-To-order:**
Please refer to the price list or reach out to your local representative for our made to made-to-order options.

**Hunk Lounge Chair with Armrest**

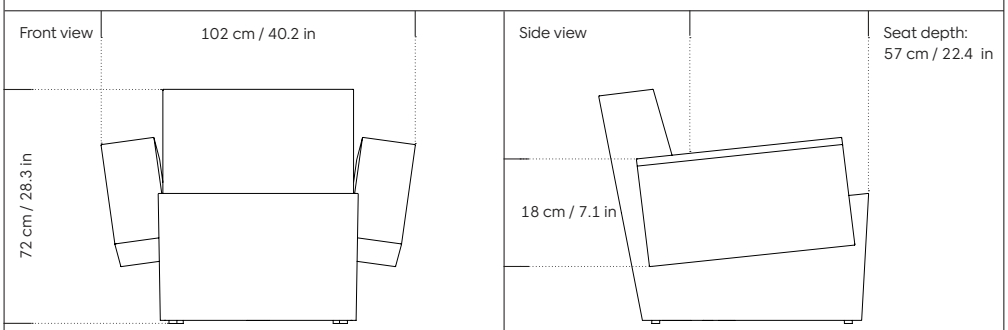


**Hunk Lounge Chair with Armrest**

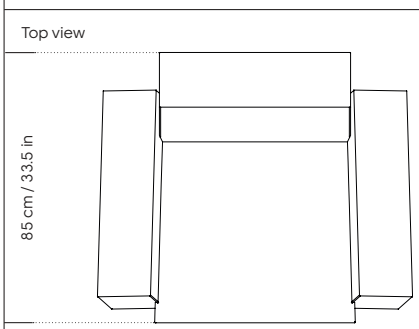

# Hunk Lounge Chair

*Design by Kwangho Lee*

The elemental block-like form of the Hunk armchair is especially characteristic of designer Kwangho Lee. In fact, the Hunk Chair is extra in every way. With exaggerated proportions, a profile so chunky it would make The Flintstones blush, and a ground-breaking construction made entirely from natural materials, Hunk is a whole lot of easy seating and conscientious furniture design. Although geometric in form, the chair's deep natural upholstery is made for melting into - natural latex and coco mat provide extreme cushioning whilst a fine bouclé textile creates a super-soft finish. Hunk is destined for lounging greatness.

**Upholstery**
*Tiree*
by Bute Fabrics (Scotland)
92% Pure New Wool, 8% Nylon
50,000 Martindale
Pilling 3-4
Lightfastness 5-8
Flame resistance EN 1021: Part 1 & 2, BS 5852: Part 1 & 2 (Crib 5), US Cal. TB 117-2013

*Amdal*
by Gudbrandsdalen Uldvarefabrik (Norway)
70% Virgin Wool, 30% Viscose
100,000 Martindale
Pilling 4
Lightfastness 5-7
Flame resistance EN 1021: Part 1 & 2, BS 5852: Part 1 & 2 (Crib 5), US Cal. TB 117-2013

**Inside material**
Wooden Structure
Latex Foam
Cocomat
Wool

**Country of origin**
Germany

**3D model**
3D files of all products are available on the product pages on hem.com

**Swan**
*Tiree*

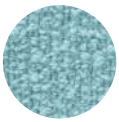

**Icicle**
*Tiree*

**Chocolate Brown**
*Tiree*

**Beige**
*Amdal*

**Samples**
We supply samples of our material finishes. You can order them directly from hem.com/samples

**Graded-in Textile and Made-To-order:**
Please refer to the price list or reach out to your local representative for our made to made-to-order options.

**Hunk Lounge Chair with Armrest**

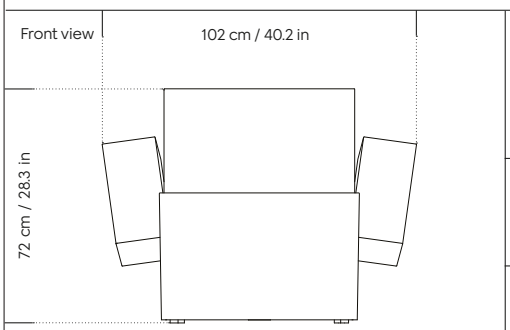


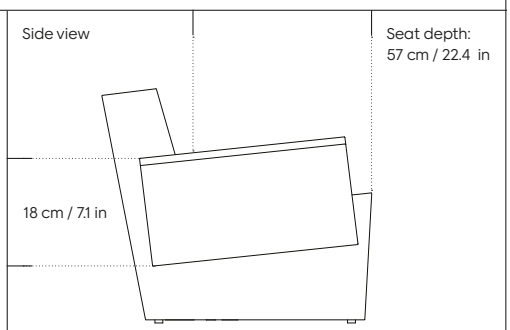


**Hunk Lounge Chair with Armrest**

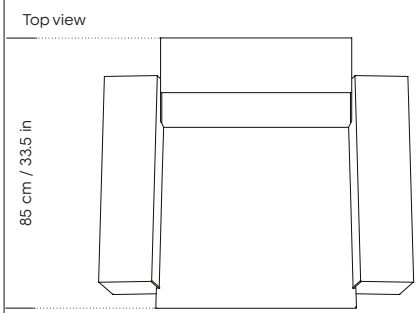

# Hunk Lounge Chair — Price List

| Product name | Finish | SKU | Retail Price SEK | List Price SEK (ex VAT) |
|---|---|---|---|---|
| **Curated Collection** | | | | |
| **Hunk Lounge Chair** | Beige | 30981 | 25 289 | 20 562 |
| **Hunk Lounge Chair** | Chocolate | 30659 | 28 164 | 22 897 |
| **Hunk Lounge Chair** | Icicle | 30660 | 28 739 | 23 368 |
| **Hunk Lounge Chair** | Swan | 30658 | 28 739 | 23 368 |
| **Hunk Lounge Chair With Armrests** | Beige | 30982 | 33 339 | 27 106 |
| **Hunk Lounge Chair With Armrests** | Checkered Black / White | 31541 | 41 044 | 33 373 |
| **Hunk Lounge Chair With Armrests** | Chocolate | 30662 | 39 664 | 32 246 |
| **Hunk Lounge Chair With Armrests** | Icicle | 30663 | 39 664 | 32 246 |
| **Hunk Lounge Chair With Armrests** | Swan | 30661 | 39 664 | 32 246 |
| **Graded-in Textile*** | | | | |
| **Hunk Lounge Chair** | Grade 1 | | 23 564 | 19 159 |
| **Hunk Lounge Chair** | Grade 2 | | 25 634 | 20 838 |
| **Hunk Lounge Chair** | Grade 3 | | 27 014 | 21 965 |
| **Hunk Lounge Chair** | Grade 4 | | 28 394 | 23 081 |
| **Hunk Lounge Chair** | Grade 5 | | 30 464 | 24 771 |
| **Hunk Lounge Chair** | Grade 6 | | 33 109 | 26 922 |
| **Hunk Lounge Chair With Armrests** | Grade 1 | | 30 809 | 25 047 |
| **Hunk Lounge Chair With Armrests** | Grade 2 | | 33 914 | 27 577 |
| **Hunk Lounge Chair With Armrests** | Grade 3 | | 34 259 | 27 853 |
| **Hunk Lounge Chair With Armrests** | Grade 4 | | 35 639 | 28 980 |
| **Hunk Lounge Chair With Armrests** | Grade 5 | | 37 709 | 30 659 |
| **Hunk Lounge Chair With Armrests** | Grade 6 | | 40 354 | 32 810 |



*Please make sure to check pro.hem.com for the most up to date information on finishes and stock availability.

# Kendo Bar Chair

*Design by LucidiPevere*

The Kendo Chair's soft, wrap-around upper offers an appealingly ergonomic seating experience. Simultaneously protective and inviting, this design by LucidiPevere offers a shielding shape combined with a gentle embrace. The generous seat is wide and comfortable, allowing you to move freely, shift position, express yourself. Whether around a boardroom or a dining table, Kendo keeps you comfortable for long periods of time. Its sturdy welded frame makes this chair built to last. A barstool and bar chair complete the Kendo family.

**Upholstery**
*Sera*
by Rohi (Germany)
94% Virgin Wool, 6% Polyamide
122,000 Martindale
Pilling 4-5; Lightfastness 5-8
Flame resistance EN 1021: Part 1 & 2, BS 5852: Part 1 & 2 (Crib 5), US Cal. TB 117-2013

*Cura*
by Gabriel (Denmark)
98% Recycled Polyester, 2% Polyester
100,000 Martindale
Pilling 4-5; Lightfastness 5-8
Flame resistance EN 1021: Part 1 & 2, US Cal. TB 117-2013

*Bute Storr*
by Bute Fabrics (Scotland)
97% Pure New Wool, 3% Nylon
65,000 Martindale
Lightfastness 5 (BS EN ISO 105 – B02)
Flame resistance IMO FTP Code(2010) Annex 1, Part 8, BS 5852: PART 1 & 2 (Crib 5), US Cal. TB 117

**Leg material**
*Steel*
Powder Coated

**Inside material**
PU foam
Steel structure & wooden structure

**Tests & certifications**
EN 16139:2013 – L2: Extreme use – Furniture – Strength, durability and safety – Requirements for non-domestic seating – ANSI/BIFMA X5.1-2017 American National Standard For Office Furnishings – General Purpose Office Chairs

**Country of origin**
Lithuania

**Porcelain**
*Sera*

**Graphite**
*Sera*

**Canyon**
*Sera (Hem exclusive)*

**Pine**
*Sera (Hem exclusive)*

**Rosewood**
*Sera*

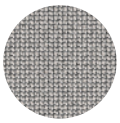

**60112**
*Cura*

**61169**
*Cura*

**60019**
*Cura*

**Eggshell**
*Bute Storr*

**Sawdust**
*Bute Storr*

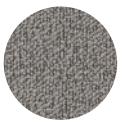

**Pebble**
*Bute Storr*

**Black (RAL 9005)**
*Powder Coated Steel*

**MTO**
Reach out to your local representative for the full selection of made-to-order options.

**3D model**
3D files of all products are available on the product pages on hem.com

**Kendo Bar Chair**

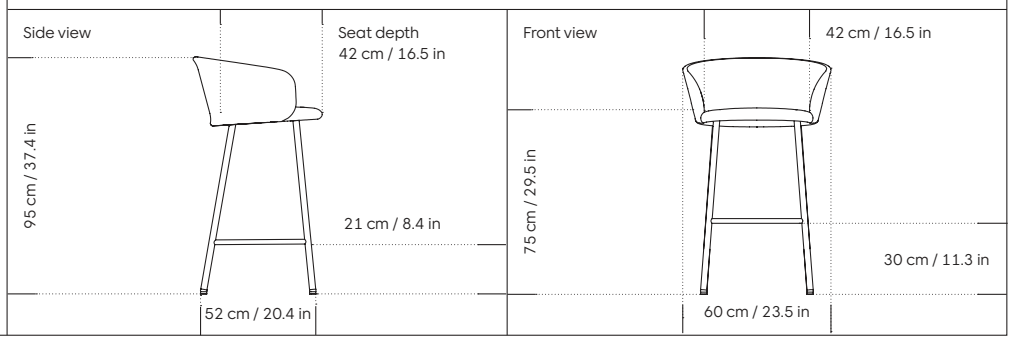

# Kendo Bar Stool

*Design by LucidiPevere*

The Kendo Chair's soft, wrap-around upper offers an appealingly ergonomic seating experience. Simultaneously protective and inviting, this design by LucidiPevere offers a shielding shape combined with a gentle embrace. The generous seat is wide and comfortable, allowing you to move freely, shift position, express yourself. Whether around a boardroom or a dining table, Kendo keeps you comfortable for long periods of time. Its sturdy welded frame makes this chair built to last. A barstool and bar chair complete the Kendo family.

**Upholstery**
*Sera*
by Rohi (Germany)
94% Virgin Wool, 6% Polyamide
122,000 Martindale
Pilling 4-5; Lightfastness 5-8
Flame resistance EN 1021: Part 1 & 2, BS 5852: Part 1 & 2 (Crib 5), US Cal. TB 117-2013

*Cura*
by Gabriel (Denmark)
98% Recycled Polyester, 2% Polyester
100,000 Martindale
Pilling 4-5; Lightfastness 5-8
Flame resistance EN 1021: Part 1 & 2, US Cal. TB 117-2013

*Bute Storr*
by Bute Fabrics (Scotland)
97% Pure New Wool, 3% Nylon
65,000 Martindale
Lightfastness 5 (BS EN ISO 105 – B02)
Flame resistance IMO FTP Code(2010) Annex 1, Part 8, BS 5852: PART 1 & 2 (Crib 5), US Cal. TB 117

**Leg material**
*Steel*
Powder Coated

**Inside material**
PU foam
Wooden structure

**Tests & certifications**
EN 16139:2013 – L2: Extreme use – Furniture – Strength, durability and safety – Requirements for non-domestic seating – ANSI/BIFMA X5.1-2017 American National Standard For Office Furnishings – General Purpose Office Chairs

**Country of origin**
Lithuania

**Porcelain**
*Sera*

**Graphite**
*Sera*

**Canyon**
*Sera (Hem exclusive)*

**Pine**
*Sera (Hem exclusive)*

**Rosewood**
*Sera*

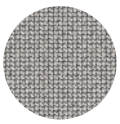

**60112**
*Cura*

**61169**
*Cura*

**60019**
*Cura*

**Eggshell**
*Bute Storr*

**Sawdust**
*Bute Storr*

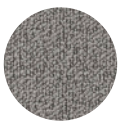

**Pebble**
*Bute Storr*

**Black (RAL 9005)**
*Powder Coated Steel*

**MTO**
Reach out to your local representative for the full selection of made-to-order options.

**3D model**
3D files of all products are available on the product pages on hem.com

**Kendo Bar Stool**

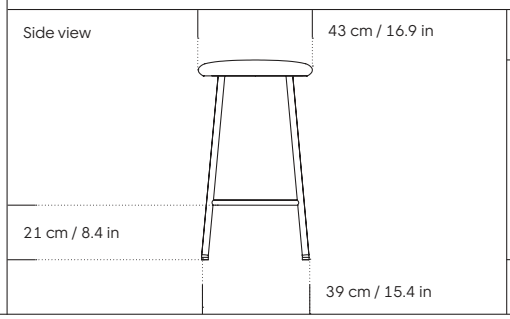


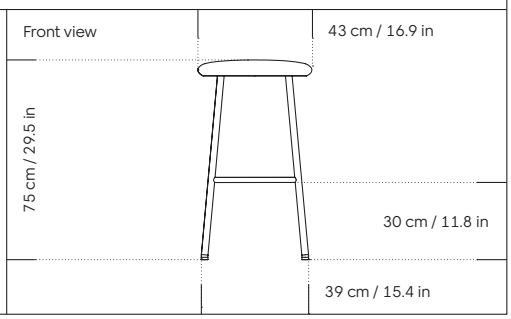

# Kendo Counter Stool

*Design by LucidiPevere*

The Kendo Chair's soft, wrap-around upper offers an appealingly ergonomic seating experience. Simultaneously protective and inviting, this design by LucidiPevere offers a shielding shape combined with a gentle embrace. The generous seat is wide and comfortable, allowing you to move freely, shift position, express yourself. Whether around a boardroom or a dining table, Kendo keeps you comfortable for long periods of time. Its sturdy welded frame makes this chair built to last. A barstool and bar chair complete the Kendo family.

**Upholstery**
*Sera*
by Rohi (Germany)
94% Virgin Wool, 6% Polyamide
122,000 Martindale
Pilling 4-5; Lightfastness 5-8
Flame resistance EN 1021: Part 1 & 2, BS 5852: Part 1 & 2 (Crib 5), US Cal. TB 117-2013

*Cura*
by Gabriel (Denmark)
98% Recycled Polyester, 2% Polyester
100,000 Martindale
Pilling 4-5; Lightfastness 5-8
Flame resistance EN 1021: Part 1 & 2, US Cal. TB 117-2013

*Bute Storr*
by Bute Fabrics (Scotland)
97% Pure New Wool, 3% Nylon
65,000 Martindale
Lightfastness 5 (BS EN ISO 105 – B02)
Flame resistance IMO FTP Code(2010) Annex 1, Part 8, BS 5852: PART 1 & 2 (Crib 5), US Cal. TB 117

**Leg material**
*Steel*
Powder Coated

**Inside material**
PU foam
Wooden structure

**Tests & certifications**
EN 16139:2013 – L2: Extreme use – Furniture – Strength, durability and safety – Requirements for non-domestic seating – ANSI/BIFMA X5.1-2017 American National Standard For Office Furnishings – General Purpose Office Chairs

**Country of origin**
Lithuania

**Porcelain**
*Sera*

**Graphite**
*Sera*

**Canyon**
*Sera (Hem exclusive)*

**Pine**
*Sera (Hem exclusive)*

**Rosewood**
*Sera*

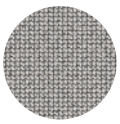

**60112**
*Cura*

**61169**
*Cura*

**60019**
*Cura*

**Eggshell**
*Bute Storr*

**Sawdust**
*Bute Storr*

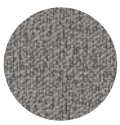

**Pebble**
*Bute Storr*

**Black (RAL 9005)**
*Powder Coated Steel*

**MTO**
Reach out to your local representative for the full selection of made-to-order options.

**3D model**
3D files of all products are available on the product pages on hem.com

**Kendo Counter Stool**

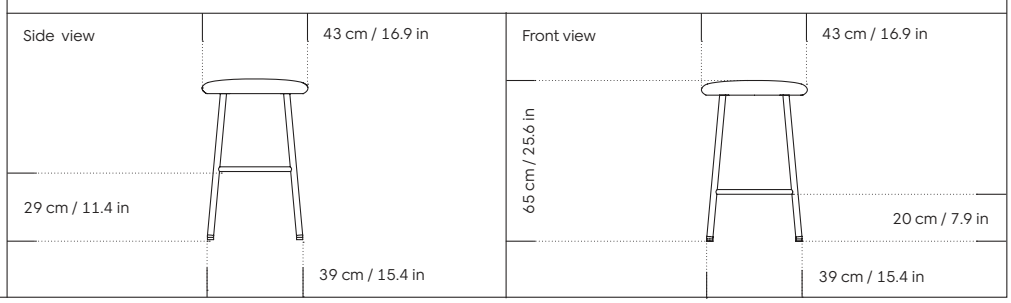

# Kendo Bar & Counter — Price List

| Product name | Finish | SKU | Retail Price SEK | List Price SEK (ex VAT) |
|---|---|---|---|---|
| **Curated Collection** | | | | |
| **Kendo Bar Chair** | Canyon | 30309 | 9 419 | 7 659 |
| **Kendo Bar Chair** | Cura 60019 | 31982 | 8 039 | 6 532 |
| **Kendo Bar Chair** | Cura 60112 | 31980 | 8 039 | 6 532 |
| **Kendo Bar Chair** | Cura 61169 | 31981 | 8 039 | 6 532 |
| **Kendo Bar Chair** | Graphite | 30308 | 9 419 | 7 659 |
| **Kendo Bar Chair** | Pine | 30641 | 9 419 | 7 659 |
| **Kendo Bar Chair** | Porcelain | 30307 | 9 419 | 7 659 |
| **Kendo Bar Chair** | Rosewood | 30645 | 9 419 | 7 659 |
| **Kendo Bar Chair** | Storr 612 | 31778 | 10 684 | 8 683 |
| **Kendo Bar Chair** | Storr 1501 | 31790 | 10 684 | 8 683 |
| **Kendo Bar Chair** | Storr 3405 | 31784 | 10 684 | 8 683 |
| **Kendo Bar Stool** | Canyon | 30313 | 5 854 | 4 761 |
| **Kendo Bar Stool** | Cura 60019 | 31985 | 5 164 | 4 198 |
| **Kendo Bar Stool** | Cura 60112 | 31983 | 5 164 | 4 198 |
| **Kendo Bar Stool** | Cura 61169 | 31984 | 5 164 | 4 198 |
| **Kendo Bar Stool** | Graphite | 30311 | 5 854 | 4 761 |
| **Kendo Bar Stool** | Pine | 30642 | 5 854 | 4 761 |
| **Kendo Bar Stool** | Porcelain | 30642 | 5 854 | 4 761 |
| **Kendo Bar Stool** | Rosewood | 30646 | 5 854 | 4 761 |
| **Kendo Bar Stool** | Storr 612 | 31779 | 6 429 | 5 221 |
| **Kendo Bar Stool** | Storr 1501 | 31791 | 6 429 | 5 221 |
| **Kendo Bar Stool** | Storr 3405 | 31785 | 6 429 | 5 221 |
| **Kendo Counter Stool** | Canyon | 30212 | 5 854 | 4 761 |
| **Kendo Counter Stool** | Cura 60019 | 31988 | 5 164 | 4 198 |
| **Kendo Counter Stool** | Cura 60112 | 31986 | 5 164 | 4 198 |
| **Kendo Counter Stool** | Cura 61169 | 31987 | 5 164 | 4 198 |
| **Kendo Counter Stool** | Graphite | 30211 | 5 854 | 4 761 |
| **Kendo Counter Stool** | Pine | 30643 | 5 854 | 4 761 |
| **Kendo Counter Stool** | Porcelain | 30315 | 5 854 | 4 761 |
| **Kendo Counter Stool** | Rosewood | 30647 | 5 854 | 4 761 |
| **Kendo Counter Stool** | Storr 612 | 31780 | 6 544 | 5 325 |
| **Kendo Counter Stool** | Storr 1501 | 31792 | 6 544 | 5 325 |
| **Kendo Counter Stool** | Storr 3405 | 31786 | 6 544 | 5 325 |
| **Graded-in Textile*** | | | | |
| **Kendo Bar Chair** | Grade 1 | | 8 729 | 7 096 |
| **Kendo Bar Chair** | Grade 2 | | 9 304 | 7 567 |
| **Kendo Bar Chair** | Grade 3 | | 9 649 | 7 843 |
| **Kendo Bar Chair** | Grade 4 | | 9 994 | 8 131 |
| **Kendo Bar Chair** | Grade 5 | | 10 569 | 8 591 |
| **Kendo Bar Chair** | Grade 6 | | 11 374 | 9 246 |
| **Kendo Bar Stool** | Grade 1 | | 5 279 | 4 290 |
| **Kendo Bar Stool** | Grade 2 | | 5 739 | 4 669 |
| **Kendo Bar Stool** | Grade 3 | | 6 084 | 4 945 |
| **Kendo Bar Stool** | Grade 4 | | 6 314 | 5 129 |
| **Kendo Bar Stool** | Grade 5 | | 6 774 | 5 509 |
| **Kendo Bar Stool** | Grade 6 | | 7 464 | 6 072 |
| **Kendo Counter Stool** | Grade 1 | | 5 279 | 4 290 |
| **Kendo Counter Stool** | Grade 2 | | 5 739 | 4 669 |
| **Kendo Counter Stool** | Grade 3 | | 6 084 | 4 945 |
| **Kendo Counter Stool** | Grade 4 | | 6 314 | 5 129 |
| **Kendo Counter Stool** | Grade 5 | | 6 774 | 5 509 |
| **Kendo Counter Stool** | Grade 6 | | 7 464 | 6 072 |



*Please make sure to check pro.hem.com for the most up to date information on finishes and stock availability.

# Kendo Chair

*Design by LucidiPevere*

The Kendo Chair's soft, wrap-around upper offers an appealingly ergonomic seating experience. Simultaneously protective and inviting, this design by LucidiPevere offers a shielding shape combined with a gentle embrace. The generous seat is wide and comfortable, allowing you to move freely, shift position, express yourself. Whether around a boardroom or a dining table, Kendo keeps you comfortable for long periods of time. Its sturdy welded frame makes this chair built to last. A barstool and bar chair complete the Kendo family.

**Upholstery**
*Sera*
by Rohi (Germany)
94% Virgin Wool, 6% Polyamide
122,000 Martindale
Pilling 4-5; Lightfastness 5-8
Flame resistance EN 1021: Part 1 & 2, BS 5852: Part 1 & 2 (Crib 5), US Cal. TB 117-2013

*Elmosoft Leather*
by Elmo (Sweden)
Scandinavian Grain Leather, Semi-aniline
Flame resistance EN 1021: Part 1 & 2, BS 5852: Part 1 & 2 (Crib 5), DIN 4102 - 1 (B1), US Cal. TB 117-2013

*Cura*
by Gabriel (Denmark)
98% Recycled Polyester, 2% Polyester
100,000 Martindale
Pilling 4-5; Lightfastness 5-8
Flame resistance EN 1021: Part 1 & 2, US Cal. TB 117-2013

*Tiree*
by Bute Fabrics (Scotland)
92% Pure New Wool, 8% Nylon
50,000 Martindale
Pilling 3-4; Lightfastness 5
Flame resistance EN 1021: Part 1 & 2, BS 5852: Part 1 & 2 (Crib 5), US Cal. TB 117-2013

*Bute Storr*
by Bute Fabrics (Scotland)
97% Pure New Wool, 3% Nylon
65,000 Martindale
Lightfastness 5 (BS EN ISO 105 – B02)
Flame resistance IMO FTP Code(2010) Annex 1, Part 8, BS 5852: PART 1 & 2 (Crib 5), US Cal. TB 117

**Leg material**
*Steel*
Powder Coated

**Inside material**
PU foam
Steel structure & wooden structure

**Tests & certifications**
EN 16139:2013 – L2: Extreme use – Furniture – Strength, durability and safety – Requirements for non-domestic seating – ANSI/BIFMA X5.1-2017 American National Standard For Office Furnishings – General Purpose Office Chairs

**Country of origin**
Lithuania

**Porcelain**
*Sera*

**Graphite**
*Sera*

**Canyon**
*Sera (Hem exclusive)*

**Pine**
*Sera (Hem exclusive)*

**Rosewood**
*Sera*

**Cognac**
*Elmosoft Leather (54035)*

**Black**
*Elmosoft Leather (99999)*

**Dark Blue**
*Cura*

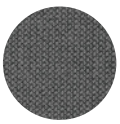
**Grey**
*Cura*

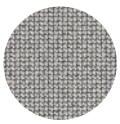
**60112**
*Cura*

**61169**
*Cura*

**60019**
*Cura*

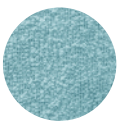
**Icicle**
*Tiree*

**Conker**
*Tiree*

**Eggshell**
*Bute Storr*

**Sawdust**
*Bute Storr*

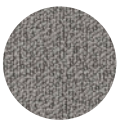
**Pebble**
*Bute Storr*

**Black (RAL 9005)**
*Powder Coated Steel*

**MTO**
Reach out to your local representative for the full selection of made-to-order options.

**3D model**
3D files of all products are available on the product pages on hem.com

**Kendo Chair**

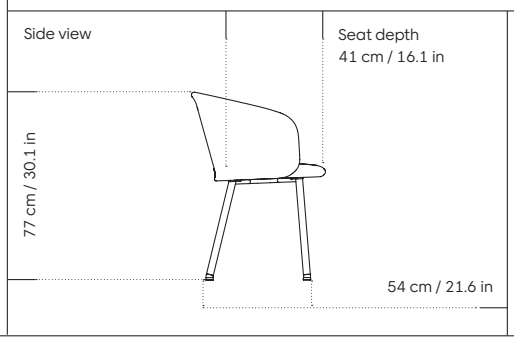

# Kendo Swivel Chair 4-star Return

*Design by LucidiPevere*

The Kendo Chair's soft, wrap-around upper offers an appealingly ergonomic seating experience. Simultaneously protective and inviting, this design by LucidiPevere offers a shielding shape combined with a gentle embrace. The generous seat is wide and comfortable, allowing you to move freely, shift position, express yourself. Whether around a boardroom or a dining table, Kendo keeps you comfortable for long periods of time. Its sturdy welded frame makes this chair built to last. A barstool and bar chair complete the Kendo family.

**Upholstery**
*Sera*
by Rohi (Germany)
94% Virgin Wool, 6% Polyamide
122,000 Martindale
Pilling 4-5; Lightfastness 5-8
Flame resistance EN 1021: Part 1 & 2, BS 5852: Part 1 & 2 (Crib 5), US Cal. TB 117-2013

*Elmosoft Leather*
by Elmo (Sweden)
Scandinavian Grain Leather, Semi-aniline
Flame resistance EN 1021: Part 1 & 2, BS 5852: Part 1 & 2 (Crib 5), DIN 4102 - 1 (B1), US Cal. TB 117-2013

*Cura*
by Gabriel (Denmark)
98% Recycled Polyester, 2% Polyester
100,000 Martindale
Pilling 4-5; Lightfastness 5-8
Flame resistance EN 1021: Part 1 & 2, US Cal. TB 117-2013

*Tiree*
by Bute Fabrics (Scotland)
92% Pure New Wool, 8% Nylon
50,000 Martindale
Pilling 3-4; Lightfastness 5
Flame resistance EN 1021: Part 1 & 2, BS 5852: Part 1 & 2 (Crib 5), US Cal. TB 117-2013

*Bute Storr*
by Bute Fabrics (Scotland)
97% Pure New Wool, 3% Nylon
65,000 Martindale
Lightfastness 5 (BS EN ISO 105 – B02)
Flame resistance IMO FTP Code(2010) Annex 1, Part 8, BS 5852: PART 1 & 2 (Crib 5), US Cal. TB 117

**Leg material**
*Steel / Aluminum*
Powder Coated / Polished

**Inside material**
PU foam
Steel structure & wooden structure

**Tests & certifications**
EN 16139:2013 – L2: Extreme use – Furniture – Strength, durability and safety – Requirements for non-domestic seating – ANSI/BIFMA X5.1-2017 American National Standard For Office Furnishings – General Purpose Office Chairs

**Country of origin**
Lithuania

**Porcelain**
*Sera*

**Graphite**
*Sera*

**Canyon**
*Sera (Hem exclusive)*

**Pine**
*Sera (Hem exclusive)*

**Rosewood**
*Sera*

**Cognac**
*Elmosoft Leather (54035)*

**Black**
*Elmosoft Leather (99999)*

**Dark Blue**
*Cura*

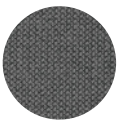
**Grey**
*Cura*

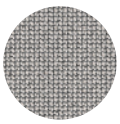
**60112**
*Cura*

**61169**
*Cura*

**60019**
*Cura*

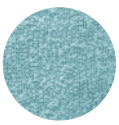
**Icicle**
*Tiree*

**Conker**
*Tiree*

**Eggshell**
*Bute Storr*

**Sawdust**
*Bute Storr*

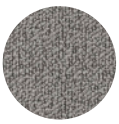
**Pebble**
*Bute Storr*

**Black (RAL 9005)**
*Powder Coated*
*Steel / Aluminium*

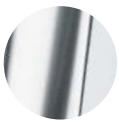
**Polished**
*Steel / Aluminium*

**MTO**
Reach out to your local representative for the full selection of made-to-order options.

**3D model**
3D files of all products are available on the product pages on hem.com

**3D model**
3D files of all products are available on the product pages on hem.com

**Kendo Swivel Chair 4-star Return**

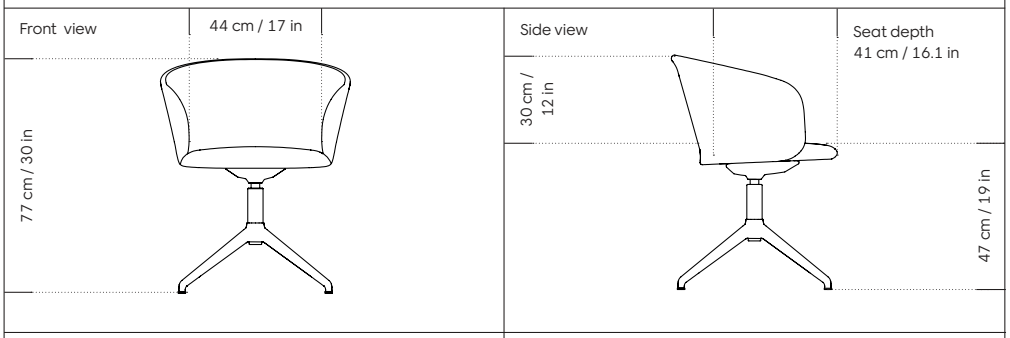


**Kendo Swivel Chair 4-star Return**

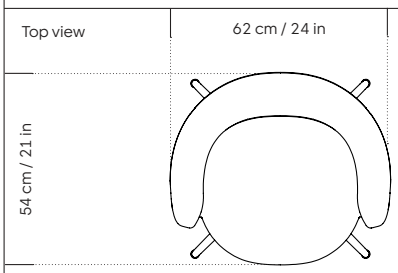

# Kendo Swivel Chair
# 5-star Castors

*Design by LucidiPevere*

The Kendo Chair's soft, wrap-around upper offers an appealingly ergonomic seating experience. Simultaneously protective and inviting, this design by LucidiPevere offers a shielding shape combined with a gentle embrace. The generous seat is wide and comfortable, allowing you to move freely, shift position, express yourself. Whether around a boardroom or a dining table, Kendo keeps you comfortable for long periods of time. Its sturdy welded frame makes this chair built to last. A barstool and bar chair complete the Kendo family.

**Upholstery**
*Sera*
by Rohi (Germany)
94% Virgin Wool, 6% Polyamide
122,000 Martindale
Pilling 4-5; Lightfastness 5-8
Flame resistance EN 1021: Part 1 & 2, BS 5852: Part 1 & 2 (Crib 5), US Cal. TB 117-2013

*Elmosoft Leather*
by Elmo (Sweden)
Scandinavian Grain Leather, Semi-aniline
Flame resistance EN 1021: Part 1 & 2, BS 5852: Part 1 & 2 (Crib 5), DIN 4102 - 1 (B1), US Cal. TB 117-2013

*Cura*
by Gabriel (Denmark)
98% Recycled Polyester, 2% Polyester
100,000 Martindale
Pilling 4-5; Lightfastness 5-8
Flame resistance EN 1021: Part 1 & 2, US Cal. TB 117-2013

*Tiree*
by Bute Fabrics (Scotland)
92% Pure New Wool, 8% Nylon
50,000 Martindale
Pilling 3-4; Lightfastness 5
Flame resistance EN 1021: Part 1 & 2, BS 5852: Part 1 & 2 (Crib 5), US Cal. TB 117-2013

*Bute Storr*
by Bute Fabrics (Scotland)
97% Pure New Wool, 3% Nylon
65,000 Martindale
Lightfastness 5 (BS EN ISO 105 – B02)
Flame resistance IMO FTP Code(2010) Annex 1, Part 8, BS 5852: PART 1 & 2 (Crib 5), US Cal. TB 117

**Leg material**
*Steel / Aluminum*
Powder Coated / Polished

**Inside material**
PU foam
Steel structure & wooden structure

**Tests & certifications**
EN 16139:2013 – L2: Extreme use – Furniture – Strength, durability and safety – Requirements for non-domestic seating – ANSI/BIFMA X5.1-2017 American National Standard For Office Furnishings – General Purpose Office Chairs

**Country of origin**
Lithuania

**Porcelain**
*Sera*

**Graphite**
*Sera*

**Canyon**
*Sera (Hem exclusive)*

**Pine**
*Sera (Hem exclusive)*

**Rosewood**
*Sera*

**Cognac**
*Elmosoft Leather (54035)*

**Black**
*Elmosoft Leather (99999)*

**Dark Blue**
*Cura*

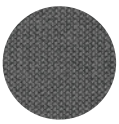
**Grey**
*Cura*

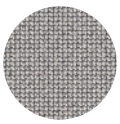
**60112**
*Cura*

**61169**
*Cura*

**60019**
*Cura*

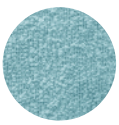
**Icicle**
*Tiree*

**Conker**
*Tiree*

**Eggshell**
*Bute Storr*

**Sawdust**
*Bute Storr*

**Pebble**
*Bute Storr*

**Black (RAL 9005)**
*Powder Coated*
*Steel / Aluminium*

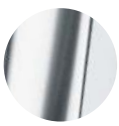
**Polished**
*Steel / Aluminium*

**MTO**
Reach out to your local representative for the full selection of made-to-order options.

**3D model**
3D files of all products are available on the product pages on hem.com

**3D model**
3D files of all products are available on the product pages on hem.com

**Kendo Swivel Chair 5-star Castors**

Front view

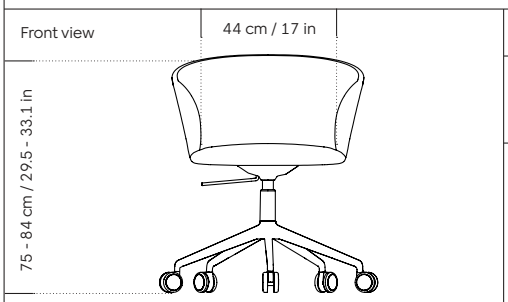


Side view

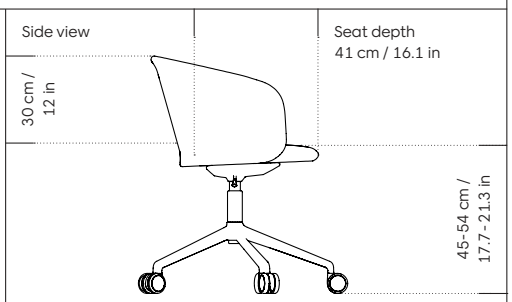


**Kendo Swivel Chair 5-star Castors**

Top view

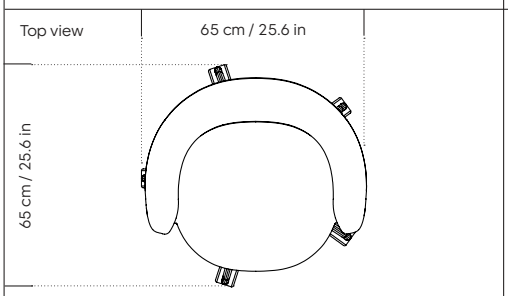

# Kendo Chairs — Price List

| Product name | Finish | SKU | Retail Price SEK | List Price SEK (ex VAT) |
|---|---|---|---|---|
| **Curated Collection** | | | | |
| **Kendo Chair** | Black Leather | 20251 | 13 099 | 10 649 |
| **Kendo Chair** | Canyon | 30209 | 8 499 | 6 912 |
| **Kendo Chair** | Cognac Leather | 20250 | 13 099 | 10 649 |
| **Kendo Chair** | Conker | 30980 | 9 764 | 7 935 |
| **Kendo Chair** | Cura 60019 | 31979 | 7 234 | 5 877 |
| **Kendo Chair** | Cura 60112 | 31977 | 7 234 | 5 877 |
| **Kendo Chair** | Cura 61169 | 31978 | 7 234 | 5 877 |
| **Kendo Chair** | Dark Blue | 30961 | 7 234 | 5 877 |
| **Kendo Chair** | Graphite | 30116 | 8 499 | 6 912 |
| **Kendo Chair** | Grey | 30962 | 7 234 | 5 877 |
| **Kendo Chair** | Icicle | 30963 | 9 764 | 7 935 |
| **Kendo Chair** | Pine | 30640 | 8 499 | 6 912 |
| **Kendo Chair** | Porcelain | 30097 | 8 499 | 6 912 |
| **Kendo Chair** | Rosewood | 30644 | 8 499 | 6 912 |
| **Kendo Chair** | Storr 612 | 31777 | 9 764 | 7 935 |
| **Kendo Chair** | Storr 1501 | 31789 | 9 764 | 7 935 |
| **Kendo Chair** | Storr 3405 | 31783 | 9 764 | 7 935 |
| **Kendo Swivel Chair 4-star Return** | Black Leather / Black | 20243 | 15 054 | 12 236 |
| **Kendo Swivel Chair 4-star Return** | Black Leather / Polished | 20245 | 15 399 | 12 524 |
| **Kendo Swivel Chair 4-star Return** | Canyon / Black | 20201 | 9 419 | 7 659 |
| **Kendo Swivel Chair 4-star Return** | Canyon / Polished | 20205 | 9 764 | 7 935 |
| **Kendo Swivel Chair 4-star Return** | Cognac Leather / Black | 20242 | 15 054 | 12 236 |
| **Kendo Swivel Chair 4-star Return** | Cognac Leather / Polished | 20244 | 15 399 | 12 524 |
| **Kendo Swivel Chair 4-star Return** | Conker / Black | 30979 | 11 029 | 8 970 |
| **Kendo Swivel Chair 4-star Return** | Conker / Polished | 30978 | 11 374 | 9 246 |
| **Kendo Swivel Chair 4-star Return** | Cura 60019/Black | 31973 | 8 614 | 7 004 |
| **Kendo Swivel Chair 4-star Return** | Cura 60019/Polished | 32018 | 8 959 | 7 280 |
| **Kendo Swivel Chair 4-star Return** | Cura 60112/Black | 31971 | 8 614 | 7 004 |
| **Kendo Swivel Chair 4-star Return** | Cura 60112/Polished | 32016 | 8 959 | 7 280 |
| **Kendo Swivel Chair 4-star Return** | Cura 61169/Black | 31972 | 8 614 | 7 004 |
| **Kendo Swivel Chair 4-star Return** | Cura 61169/Polished | 32017 | 8 959 | 7 280 |
| **Kendo Swivel Chair 4-star Return** | Dark Blue / Black | 30967 | 8 614 | 7 004 |
| **Kendo Swivel Chair 4-star Return** | Dark Blue / Polished | 30966 | 8 959 | 7 280 |
| **Kendo Swivel Chair 4-star Return** | Graphite / Black | 20203 | 9 419 | 7 659 |
| **Kendo Swivel Chair 4-star Return** | Graphite / Polished | 20207 | 9 764 | 7 935 |
| **Kendo Swivel Chair 4-star Return** | Grey / Black | 30971 | 8 614 | 7 004 |
| **Kendo Swivel Chair 4-star Return** | Grey / Polished | 30970 | 8 959 | 7 280 |
| **Kendo Swivel Chair 4-star Return** | Icicle / Black | 30975 | 11 029 | 8 970 |
| **Kendo Swivel Chair 4-star Return** | Icicle / Polished | 30974 | 11 374 | 9 246 |
| **Kendo Swivel Chair 4-star Return** | Pine / Black | 20455 | 9 419 | 7 659 |
| **Kendo Swivel Chair 4-star Return** | Pine / Polished | 20456 | 9 764 | 7 935 |
| **Kendo Swivel Chair 4-star Return** | Porcelain / Black | 20202 | 9 419 | 7 659 |
| **Kendo Swivel Chair 4-star Return** | Porcelain / Polished | 20206 | 9 764 | 7 935 |
| **Kendo Swivel Chair 4-star Return** | Rosewood / Black | 20459 | 9 419 | 7 659 |
| **Kendo Swivel Chair 4-star Return** | Rosewood / Polished | 20460 | 9 764 | 7 935 |
| **Kendo Swivel Chair 4-star Return** | Storr 612/Black | 31775 | 11 029 | 8 970 |
| **Kendo Swivel Chair 4-star Return** | Storr 612/Polished | 32013 | 11 374 | 9 246 |
| **Kendo Swivel Chair 4-star Return** | Storr 1501/Black | 31787 | 11 029 | 8 970 |
| **Kendo Swivel Chair 4-star Return** | Storr 1501/Polished | 32014 | 11 374 | 9 246 |
| **Kendo Swivel Chair 4-star Return** | Storr 3405/Black | 31781 | 11 029 | 8 970 |
| **Kendo Swivel Chair 4-star Return** | Storr 3405/Polished | 32015 | 11 374 | 9 246 |

# Kendo Chairs — Price List

| Product name | Finish | SKU | Retail Price SEK | List Price SEK (ex VAT) |
|---|---|---|---|---|
| **Curated Collection** | | | | |
| **Kendo Swivel Chair 5-star Castors** | Black Leather / Black | 20247 | 15 054 | 12 236 |
| **Kendo Swivel Chair 5-star Castors** | Black Leather / Polished | 20249 | 15 399 | 12 524 |
| **Kendo Swivel Chair 5-star Castors** | Canyon / Black | 20209 | 9 879 | 8 027 |
| **Kendo Swivel Chair 5-star Castors** | Canyon / Polished | 20213 | 10 339 | 8 407 |
| **Kendo Swivel Chair 5-star Castors** | Cognac Leather / Black | 20246 | 15 054 | 12 236 |
| **Kendo Swivel Chair 5-star Castors** | Cognac Leather / Polished | 20248 | 15 399 | 12 524 |
| **Kendo Swivel Chair 5-star Castors** | Conker / Black | 30977 | 11 144 | 9 062 |
| **Kendo Swivel Chair 5-star Castors** | Conker / Polished | 30976 | 11 489 | 9 338 |
| **Kendo Swivel Chair 5-star Castors** | Cura 60019/Black | 32024 | 8 959 | 7 280 |
| **Kendo Swivel Chair 5-star Castors** | Cura 60019/Polished | 31976 | 9 189 | 7 475 |
| **Kendo Swivel Chair 5-star Castors** | Cura 60112/Black | 32022 | 8 959 | 7 280 |
| **Kendo Swivel Chair 5-star Castors** | Cura 60112/Polished | 31974 | 9 189 | 7 475 |
| **Kendo Swivel Chair 5-star Castors** | Cura 61169/Black | 32023 | 8 959 | 7 280 |
| **Kendo Swivel Chair 5-star Castors** | Cura 61169/Polished | 31975 | 9 189 | 7 475 |
| **Kendo Swivel Chair 5-star Castors** | Dark Blue / Black | 30965 | 8 959 | 7 280 |
| **Kendo Swivel Chair 5-star Castors** | Dark Blue / Polished | 30964 | 9 189 | 7 475 |
| **Kendo Swivel Chair 5-star Castors** | Graphite / Black | 20211 | 9 879 | 8 027 |
| **Kendo Swivel Chair 5-star Castors** | Graphite / Polished | 20215 | 10 339 | 8 407 |
| **Kendo Swivel Chair 5-star Castors** | Grey / Black | 30969 | 8 959 | 7 280 |
| **Kendo Swivel Chair 5-star Castors** | Grey / Polished | 30968 | 9 189 | 7 475 |
| **Kendo Swivel Chair 5-star Castors** | Icicle / Black | 30973 | 11 144 | 9 062 |
| **Kendo Swivel Chair 5-star Castors** | Icicle / Polished | 30972 | 11 489 | 9 338 |
| **Kendo Swivel Chair 5-star Castors** | Pine / Black | 20457 | 9 879 | 8 027 |
| **Kendo Swivel Chair 5-star Castors** | Pine / Polished | 20458 | 10 339 | 8 407 |
| **Kendo Swivel Chair 5-star Castors** | Porcelain / Black | 20210 | 9 879 | 8 027 |
| **Kendo Swivel Chair 5-star Castors** | Porcelain / Polished | 20214 | 10 339 | 8 407 |
| **Kendo Swivel Chair 5-star Castors** | Rosewood / Black | 20461 | 9 879 | 8 027 |
| **Kendo Swivel Chair 5-star Castors** | Rosewood / Polished | 20462 | 10 339 | 8 407 |
| **Kendo Swivel Chair 5-star Castors** | Storr 612/Black | 32019 | 11 144 | 9 062 |
| **Kendo Swivel Chair 5-star Castors** | Storr 612/Polished | 31776 | 11 489 | 9 338 |
| **Kendo Swivel Chair 5-star Castors** | Storr 1501/Black | 32020 | 11 144 | 9 062 |
| **Kendo Swivel Chair 5-star Castors** | Storr 1501/Polished | 31788 | 11 489 | 9 338 |
| **Kendo Swivel Chair 5-star Castors** | Storr 3405/Black | 32021 | 11 144 | 9 062 |
| **Kendo Swivel Chair 5-star Castors** | Storr 3405/Polished | 31782 | 11 489 | 9 338 |
| **Graded-in Textile*** | | | | |
| **Kendo Chair** | Grade 1 | | 7 349 | 5 980 |
| **Kendo Chair** | Grade 2 | | 7 809 | 6 348 |
| **Kendo Chair** | Grade 3 | | 8 614 | 7 004 |
| **Kendo Chair** | Grade 4 | | 8 844 | 7 188 |
| **Kendo Chair** | Grade 5 | | 9 189 | 7 475 |
| **Kendo Chair** | Grade 6 | | 9 879 | 8 027 |
| **Kendo Swivel Chair 4-star Return** | Grade 1 | | 8 844 | 7 188 |
| **Kendo Swivel Chair 4-star Return** | Grade 2 | | 9 304 | 7 567 |
| **Kendo Swivel Chair 4-star Return** | Grade 3 | | 9 649 | 7 843 |
| **Kendo Swivel Chair 4-star Return** | Grade 4 | | 9 994 | 8 131 |
| **Kendo Swivel Chair 4-star Return** | Grade 5 | | 10 569 | 8 591 |
| **Kendo Swivel Chair 4-star Return** | Grade 6 | | 11 374 | 9 246 |
| **Kendo Swivel Chair 5-star Castors** | Grade 1 | | 9 074 | 7 372 |
| **Kendo Swivel Chair 5-star Castors** | Grade 2 | | 9 534 | 7 751 |
| **Kendo Swivel Chair 5-star Castors** | Grade 3 | | 9 994 | 8 131 |
| **Kendo Swivel Chair 5-star Castors** | Grade 4 | | 10 224 | 8 315 |
| **Kendo Swivel Chair 5-star Castors** | Grade 5 | | 10 799 | 8 775 |
| **Kendo Swivel Chair 5-star Castors** | Grade 6 | | 11 604 | 9 430 |

*Please make sure to check pro.hem.com for the most up to date information on finishes and stock availability.

# Last Stool

*Design by Max Lamb*

The Last Stool is one of our most beloved and most enduring products. Designer Max Lamb set out to make the “last” stool—the most durable, most elemental, most functional, most definitive object. The stool is spun from a single sheet of metal, making it incredibly strong, and each has a wide indentation for easy lifting and movement. The Last Stool is for sitting—it works around every type of table and in every kind of interior—but consider it as a handsome occasional table, too. Choose between beautiful copper or brass, whose surface will elegantly patina over time; single-color enamel for an immediate chromatic punctuation mark; or a hand-splattered enamel finish, where each stool is unique.

**Material**
*Steel*
Enamelled
High Gloss

*Copper*
Polished

*Brass*
Polished

**Country of origin**
Enameled: Poland
Polished Brass & Copper: Italy

**Tests & certifications**
ANSI/BIFMA X5.1-2017 American National Standard For Office Furnishings – General Purpose Office Chairs

EN 16139:2013, Furniture - Strength, durability and safety - Requirements for non domestic seating Test severity L2: Extreme use: E.g. in night-clubs, police stations, transport terminals, sport changing rooms, prisons, barracks (non-controlled areas).

**Black**
*Enamelled Steel*

**Sand**
*Enamelled Steel*



**Signal White**
*Enamelled Steel*



**Pale Lime**
*Enamelled Steel*

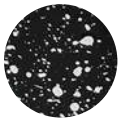

**Black / White Splatter**
*Enamelled Steel*

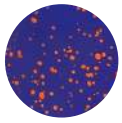

**Blue / Orange Splatter**
*Enamelled Steel*

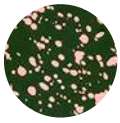

**Green / Pink Splatter**
*Enamelled Steel*

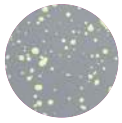

**Grey / Lime Splatter**
*Enamelled Steel*

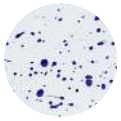

**White / Blue Splatter**
*Enamelled Steel*

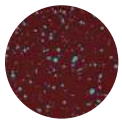

**Burgundy / Sky Blue Splatter**
*Enamelled Steel*

**Brown / Pale Lime Splatter**
*Enamelled Steel*

**Polished Copper**

**Polished Brass**

**Samples**
We supply samples of our material finishes. You can order them directly from hem.com/samples

**Made-To-Order**
Please refer to the price list or reach out to your local representative for our made-to-order options

**3D model**
3D files of all products are available on the product pages on hem.com

**Last Stool**

Top view

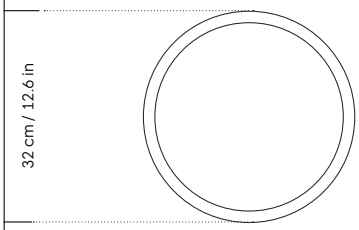


Front view

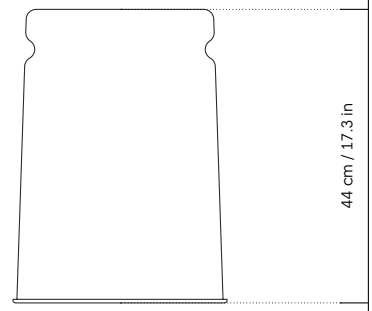


**Last Stool with felt strips for stacking**

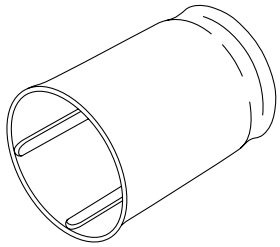

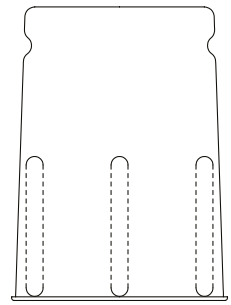

**Stackability**

Last Stool
1 – 10

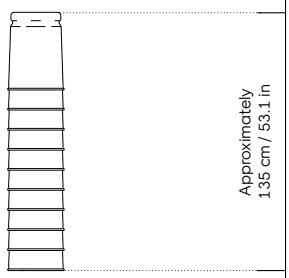


The Last Stools can only be stacked by using the custom felt strips you receive in your package. You can also order the felt strips on our website. Please only stack a maximum of 10 Last Stools and never stack them without the felt strips. Do not sit on the stools when they are stacked.

# Last Stool — Price List

| Product name | Finish | SKU | Retail Price SEK | List Price SEK (ex VAT) |
|---|---|---|---|---|
| **Curated Collection** | | | | |
| **Last Stool** | Black | 13636 | 4 129 | 3 358 |
| **Last Stool** | Black / White Splatter | 14144 | 5 279 | 4 290 |
| **Last Stool** | Blue / Orange Splatter | 30316 | 5 279 | 4 290 |
| **Last Stool** | Brass | 13087 | 8 269 | 6 728 |
| **Last Stool** | Brown / Pale Lime Splatter | 31061 | 5 279 | 4 290 |
| **Last Stool** | Burgundy / Sky Blue Splatter | 31062 | 5 279 | 4 290 |
| **Last Stool** | Copper | 13089 | 8 269 | 6 728 |
| **Last Stool** | Green / Pink Splatter | 14145 | 5 279 | 4 290 |
| **Last Stool** | Grey / Lime Splatter | 30564 | 5 279 | 4 290 |
| **Last Stool** | Pale Lime | 31063 | 4 129 | 3 358 |
| **Last Stool** | Sand | 30562 | 4 129 | 3 358 |
| **Last Stool** | White | 13637 | 4 129 | 3 358 |
| **Last Stool** | White / Blue Splatter | 14147 | 5 279 | 4 290 |

# Puffy Lounge Chair

*Design by Faye Toogood*

The detachable upholstery of the Puffy Lounge Chair is fat and plump, its generous shape spills freely over the sides of a tubular steel frame which, in stark contrast, is hard-lined and strong. The two key elements of this seating design by Faye Toogood are in purposeful and playful juxtaposi- tion. The elementary frame is inspired by the rational structure of classic modernist design, whilst the extravagant quilt-like upholstery warmly embraces and envelopes, is comforting and reassuring. The Puffy Chair frame is available in powder-coated or sand-blasted steel finishes and a choice of thick canvas, chunky bouclé or luxurious leather upholstery.

**Upholstery**
*Disco Coex*
by Chioccarello (Italy)
70% Cotton, 20% Acrylic, 5% Viscose, 5% Linen
>50,000 Martindale
Pilling 4-5
Lightfastness 4-5
Flame resistance IMO, 1 IM UNI 9175, EN 1021-1:2006, EN 1021-2:2006, CRIB 5, TB 117:2013

*Elmosoft Leather*
by Elmo (Sweden)
Scandinavian Grain Leather, Semi-aniline
Lightfastness 6

*Bute Storr*
by Bute Fabrics (Scotland)
97% Pure New Wool, 3% Nylon
65,000 Martindale
Lightfastness 5 (BS EN ISO 105 – B02)
Flame resistance IMO FTP Code(2010) Annex 1, Part 8, BS 5852: PART 1 & 2 (Crib 5), US Cal. TB 117

*Velluto Coex*
by Chioccarello (Italy)
100% Cotton
65,000 Martindale
Pilling 4-5
Lightfastness 5
Flame resistance IMO, 1 IM UNI 9175, EN 1021-1:2006, EN 1021-2:2006, CRIB 5, TB 117:2013

**Leg material**
*Steel*
Stainless, Sand Blasted
Powder Coated

**Inside material**
50% PU Foam, 50% Ball Fiber

**Country of origin**
Lithuania

**Tests & certifications**
EN 16139:2013 – L2: Extreme use – Furniture – Strength, durability and safety – Requirements for non-domestic seating

**3D model**
3D files of all products are available on the product pages on hem.com

**Product accessory**
Puffy Lounge Ottoman

**Natural**
*Disco COEX (Number 5)*

**Anthracite**
*Disco Coex (Number 26)*

**Sand Leather***
*Elmosoft Leather (02119)*

*Elmosoft Leather (03009)*

**Black Leather**
*Elmosoft Leather (99999)*

**Cognac Leather**
*Elmosoft Leather (54035)*

**Dark Green Leather**
*Elmosoft Leather (98015)*

**Light Blue Leather***
*Elmosoft Leather (87021)*

**Eggshell**
*Bute Storr Eggshell*

**Sawdust**
*Bute Storr Sawdust*

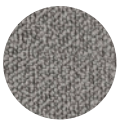

**Pebble**
*Bute Storr Pebble*

**VL30**
*Velluto Coex*

**Cream (RAL 9001)**
*Powder Coated Steel*

**Traffic Red (RAL 3020)**
*Powder Coated Steel*

**Chocolate Brown (RAL 8017)**
*Powder Coated Steel*

**Stainless**
*Steel*

**Black Grey (RAL 7021)**
*Powder Coated Steel*

**Samples**
We supply samples of our material finishes. You can order them directly from hem.com/samples

*expiring finish

**Puffy Lounge Chair Frame**

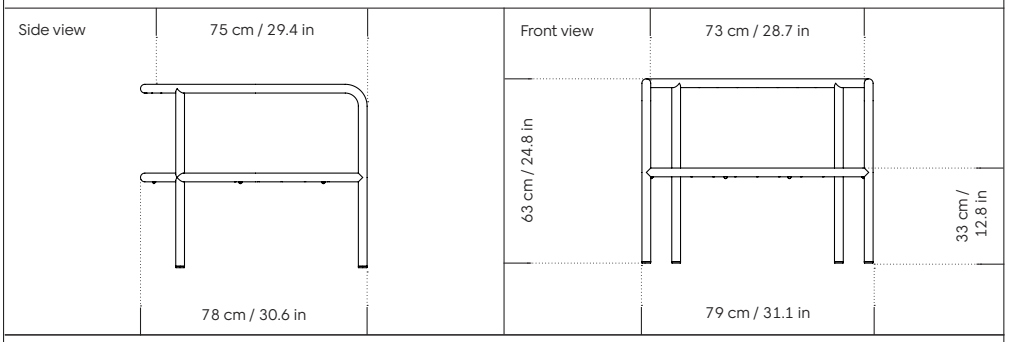


**Puffy Lounge Chair**

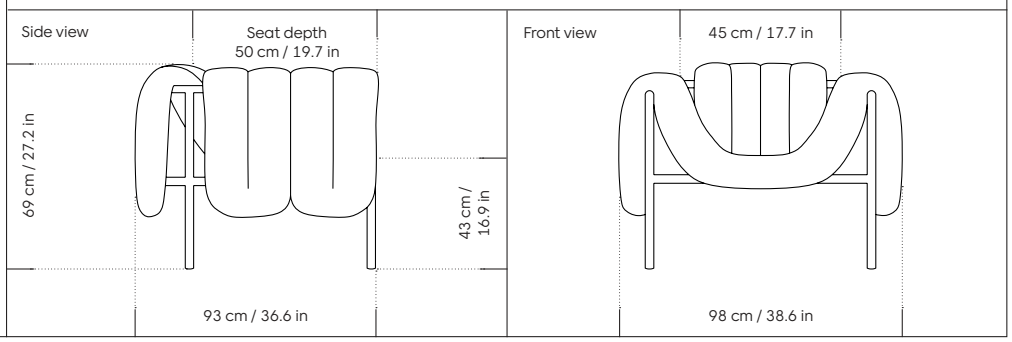

# Puffy Ottoman

*Design by Faye Toogood*

The detachable upholstery of the Puffy Lounge Chair is fat and plump, its generous shape spills freely over the sides of a tubular steel frame which, in stark contrast, is hard-lined and strong. The two key elements of this seating design by Faye Toogood are in purposeful and playful juxtaposi- tion. The elementary frame is inspired by the rational structure of classic modernist design, whilst the extravagant quilt-like upholstery warmly embraces and envelopes, is comforting and reassuring. The Puffy Chair frame is available in powder-coated or sand-blasted steel finishes and a choice of thick canvas, chunky bouclé or luxurious leather upholstery.

**Upholstery**
*Disco Coex*
by Chioccarello (Italy)
70% Cotton, 20% Acrylic, 5% Viscose, 5% Linen
>50,000 Martindale
Pilling 4-5
Lightfastness 4-5
Flame resistance IMO, 1 IM UNI 9175, EN 1021-1:2006, EN 1021-2:2006, CRIB 5, TB 117:2013

*Elmosoft Leather*
by Elmo (Sweden)
Scandinavian Grain Leather, Semi-aniline
Lightfastness 6

*Bute Storr*
by Bute Fabrics (Scotland)
97% Pure New Wool, 3% Nylon
65,000 Martindale
Lightfastness 5 (BS EN ISO 105 – B02)
Flame resistance IMO FTP Code(2010) Annex 1, Part 8, BS 5852: PART 1 & 2 (Crib 5), US Cal. TB 117

*Velluto Coex*
by Chioccarello (Italy)
100% Cotton
65,000 Martindale
Pilling 4-5
Lightfastness 5
Flame resistance IMO, 1 IM UNI 9175, EN 1021-1:2006, EN 1021-2:2006, CRIB 5, TB 117:2013

**Leg material**
*Steel*
Stainless, Sand Blasted
Powder Coated

**Inside material**
50% PU Foam, 50% Ball Fiber

**Country of origin**
Lithuania

**Tests & certifications**
EN 16139:2013 – L2: Extreme use – Furniture – Strength, durability and safety – Requirements for non-domestic seating

**3D model**
3D files of all products are available on the product pages on hem.com

**Product accessory**
Puffy Lounge Lounge Chair

**Natural**
*Disco COEX (Number 5)*

**Anthracite**
*Disco Coex (Number 26)*

**Sand Leather***
*Elmosoft Leather (02119)*

*Elmosoft Leather (03009)*

**Black Leather**
*Elmosoft Leather (99999)*

**Cognac Leather**
*Elmosoft Leather (54035)*

**Eggshell**
*Bute Storr Eggshell*

**Sawdust**
*Bute Storr Sawdust*

**VL30**
*Velluto Coex*

**Cream (RAL 9001)**
*Powder Coated Steel*

**Black Grey (RAL 7021)**
*Powder Coated Steel*

**Stainless**
*Steel*

**MTO**
Reach out to your local representative for the full selection of made-to-order options.

*expiring finish

**Puffy Lounge Chair Frame**

Side view

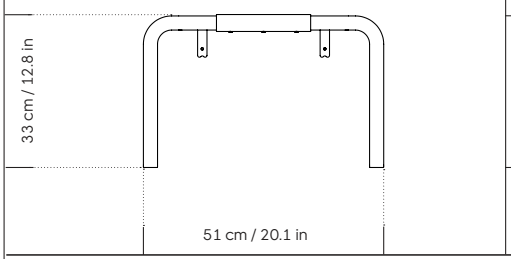


Front view

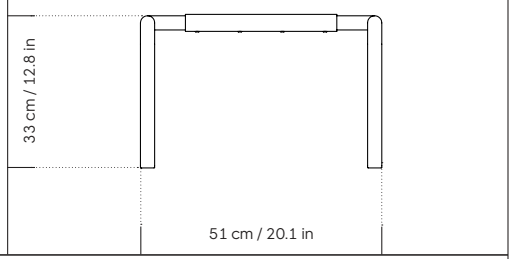


**Puffy Lounge Chair**

Side view

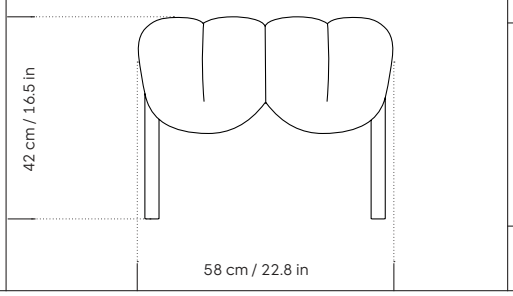


Front view

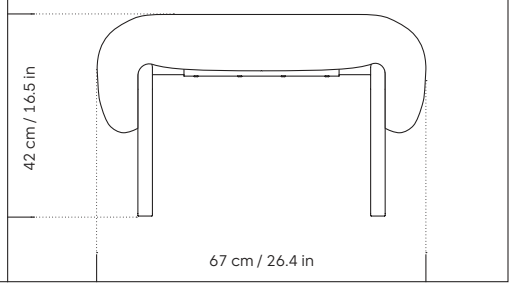

# Puffy Lounge Chair — Price List

| Product name | Finish | SKU | Retail Price SEK | List Price SEK (ex VAT) |
|---|---|---|---|---|
| **Curated Collection** | | | | |
| **Puffy Lounge Chair** | Anthracite / Black Grey | 20195 | 32 304 | 26 266 |
| **Puffy Lounge Chair** | Anthracite / Chocolate Brown | 20493 | 32 304 | 26 266 |
| **Puffy Lounge Chair** | Anthracite / Cream | 20198 | 32 304 | 26 266 |
| **Puffy Lounge Chair** | Anthracite / Stainless | 20192 | 37 594 | 30 567 |
| **Puffy Lounge Chair** | Anthracite / Traffic Red | 20492 | 32 304 | 26 266 |
| **Puffy Lounge Chair** | Black Leather / Black Grey | 20259 | 45 184 | 36 731 |
| **Puffy Lounge Chair** | Black Leather / Chocolate Brown | 20491 | 45 184 | 36 731 |
| **Puffy Lounge Chair** | Black Leather / Cream | 20260 | 45 184 | 36 731 |
| **Puffy Lounge Chair** | Black Leather / Stainless | 20258 | 49 899 | 40 572 |
| **Puffy Lounge Chair** | Black Leather / Traffic Red | 20490 | 45 184 | 36 731 |
| **Puffy Lounge Chair** | Dark Green Leather / Black Grey | 20489 | 45 184 | 36 731 |
| **Puffy Lounge Chair** | Dark Green Leather / Chocolate Brown | 20488 | 45 184 | 36 731 |
| **Puffy Lounge Chair** | Dark Green Leather / Cream | 20487 | 45 184 | 36 731 |
| **Puffy Lounge Chair** | Dark Green Leather / Stainless | 20486 | 49 899 | 40 572 |
| **Puffy Lounge Chair** | Dark Green Leather / Traffic Red | 20485 | 45 184 | 36 731 |
| **Puffy Lounge Chair** | Eggshell / Black Grey | 20296 | 38 744 | 31 499 |
| **Puffy Lounge Chair** | Eggshell / Chocolate Brown | 20484 | 38 744 | 31 499 |
| **Puffy Lounge Chair** | Eggshell / Cream | 20297 | 38 744 | 31 499 |
| **Puffy Lounge Chair** | Eggshell / Stainless | 20295 | 44 034 | 35 800 |
| **Puffy Lounge Chair** | Eggshell / Traffic Red | 20483 | 38 744 | 31 499 |
| **Puffy Lounge Chair** | Elmosoft Leather 03009 / Black Grey | 90071 | 45 184 | 36 731 |
| **Puffy Lounge Chair** | Elmosoft Leather 03009 / Chocolate Brown | 90089 | 45 184 | 36 731 |
| **Puffy Lounge Chair** | Elmosoft Leather 03009 / Cream | 90053 | 45 184 | 36 731 |
| **Puffy Lounge Chair** | Elmosoft Leather 03009 / Stainless | 90125 | 49 899 | 40 572 |
| **Puffy Lounge Chair** | Elmosoft Leather 03009 / Traffic Red | 90107 | 45 184 | 36 731 |
| **Puffy Lounge Chair** | Elmosoft Leather 54035 / Black Grey | 90070 | 45 184 | 36 731 |
| **Puffy Lounge Chair** | Elmosoft Leather 54035 / Chocolate Brown | 90088 | 45 184 | 36 731 |
| **Puffy Lounge Chair** | Elmosoft Leather 54035 / Cream | 90052 | 45 184 | 36 731 |
| **Puffy Lounge Chair** | Elmosoft Leather 54035 / Stainless | 90124 | 49 899 | 40 572 |
| **Puffy Lounge Chair** | Elmosoft Leather 54035 / Traffic Red | 90106 | 45 184 | 36 731 |
| **Puffy Lounge Chair** | Light Blue Leather / Black Grey | 20482 | 45 184 | 36 731 |
| **Puffy Lounge Chair** | Light Blue Leather / Chocolate Brown | 20481 | 45 184 | 36 731 |
| **Puffy Lounge Chair** | Light Blue Leather / Cream | 20480 | 45 184 | 36 731 |
| **Puffy Lounge Chair** | Light Blue Leather / Stainless | 20479 | 49 899 | 40 572 |
| **Puffy Lounge Chair** | Light Blue Leather / Traffic Red | 20478 | 45 184 | 36 731 |
| **Puffy Lounge Chair** | Natural / Black Grey | 20194 | 32 304 | 26 266 |
| **Puffy Lounge Chair** | Natural / Chocolate Brown | 20477 | 32 304 | 26 266 |
| **Puffy Lounge Chair** | Natural / Cream | 20197 | 32 304 | 26 266 |
| **Puffy Lounge Chair** | Natural / Stainless | 20191 | 37 594 | 30 567 |
| **Puffy Lounge Chair** | Natural / Traffic Red | 20476 | 32 304 | 26 266 |
| **Puffy Lounge Chair** | Pebble / Black Grey | 20475 | 38 744 | 31 499 |
| **Puffy Lounge Chair** | Pebble / Chocolate Brown | 20474 | 38 744 | 31 499 |
| **Puffy Lounge Chair** | Pebble / Cream | 20473 | 38 744 | 31 499 |
| **Puffy Lounge Chair** | Pebble / Stainless | 20472 | 44 034 | 35 800 |
| **Puffy Lounge Chair** | Pebble / Traffic Red | 20471 | 38 744 | 31 499 |
| **Puffy Lounge Chair** | Sand Leather / Black Grey | 20196 | 45 184 | 36 731 |
| **Puffy Lounge Chair** | Sand Leather / Chocolate Brown | 20470 | 45 184 | 36 731 |
| **Puffy Lounge Chair** | Sand Leather / Cream | 20199 | 45 184 | 36 731 |
| **Puffy Lounge Chair** | Sand Leather / Stainless | 20193 | 49 899 | 40 572 |
| **Puffy Lounge Chair** | Sand Leather / Traffic Red | 20469 | 45 184 | 36 731 |
| **Puffy Lounge Chair** | Sawdust / Black Grey | 20299 | 38 744 | 31 499 |
| **Puffy Lounge Chair** | Sawdust / Chocolate Brown | 20468 | 38 744 | 31 499 |
| **Puffy Lounge Chair** | Sawdust / Cream | 20300 | 38 744 | 31 499 |
| **Puffy Lounge Chair** | Sawdust / Stainless | 20298 | 44 034 | 35 800 |
| **Puffy Lounge Chair** | Sawdust / Traffic Red | 20467 | 38 744 | 31 499 |
| **Puffy Lounge Chair** | Velluto Coex VL30/Black Grey | 31843 | 35 524 | 28 877 |
| **Puffy Lounge Chair** | Velluto Coex VL30/Chocolate | 31844 | 35 524 | 28 877 |
| **Puffy Lounge Chair** | Velluto Coex VL30/Cream | 31845 | 35 524 | 28 877 |
| **Puffy Lounge Chair** | Velluto Coex VL30/Stainless | 31846 | 41 389 | 33 649 |
| **Puffy Lounge Chair** | Velluto Coex VL30/Traffic Red | 31847 | 35 524 | 28 877 |

# Puffy Lounge Chair — Price List

| Product name | Finish | SKU | Retail Price SEK | List Price SEK (ex VAT) |
|---|---|---|---|---|
| **Curated Collection** | | | | |
| **Puffy Lounge Chair + Ottoman** | Anthracite / Black Grey | 20311 | 44 022 | 35 788 |
| **Puffy Lounge Chair + Ottoman** | Anthracite / Cream | 20314 | 44 022 | 35 788 |
| **Puffy Lounge Chair + Ottoman** | Anthracite / Stainless | 20308 | 51 727 | 42 056 |
| **Puffy Lounge Chair + Ottoman** | Black Leather / Black Grey | 20356 | 61 617 | 50 094 |
| **Puffy Lounge Chair + Ottoman** | Black Leather / Cream | 20357 | 61 617 | 50 094 |
| **Puffy Lounge Chair + Ottoman** | Black Leather / Stainless | 20355 | 68 747 | 55 890 |
| **Puffy Lounge Chair + Ottoman** | Eggshell / Black Grey | 20317 | 52 877 | 42 987 |
| **Puffy Lounge Chair + Ottoman** | Eggshell / Cream | 20318 | 52 877 | 42 987 |
| **Puffy Lounge Chair + Ottoman** | Eggshell / Stainless | 20316 | 60 467 | 49 163 |
| **Puffy Lounge Chair + Ottoman** | Elmosoft Leather 03009 / Black Grey | 90251 | 61 617 | 50 094 |
| **Puffy Lounge Chair + Ottoman** | Elmosoft Leather 03009 / Cream | 90233 | 61 617 | 50 094 |
| **Puffy Lounge Chair + Ottoman** | Elmosoft Leather 03009 / Stainless | 90305 | 68 747 | 55 890 |
| **Puffy Lounge Chair + Ottoman** | Elmosoft Leather 54035 / Black Grey | 90250 | 61 617 | 50 094 |
| **Puffy Lounge Chair + Ottoman** | Elmosoft Leather 54035 / Cream | 90232 | 61 617 | 50 094 |
| **Puffy Lounge Chair + Ottoman** | Elmosoft Leather 54035 / Stainless | 90304 | 68 747 | 55 890 |
| **Puffy Lounge Chair + Ottoman** | Natural / Black Grey | 20310 | 44 022 | 35 788 |
| **Puffy Lounge Chair + Ottoman** | Natural / Cream | 20313 | 44 022 | 35 788 |
| **Puffy Lounge Chair + Ottoman** | Natural / Stainless | 20307 | 51 727 | 42 056 |
| **Puffy Lounge Chair + Ottoman** | Sand Leather / Black Grey | 20312 | 61 617 | 50 094 |
| **Puffy Lounge Chair + Ottoman** | Sand Leather / Cream | 20315 | 61 617 | 50 094 |
| **Puffy Lounge Chair + Ottoman** | Sand Leather / Stainless | 20309 | 68 747 | 55 890 |
| **Puffy Lounge Chair + Ottoman** | Sawdust / Black Grey | 20320 | 52 877 | 42 987 |
| **Puffy Lounge Chair + Ottoman** | Sawdust / Cream | 20321 | 52 877 | 42 987 |
| **Puffy Lounge Chair + Ottoman** | Sawdust / Stainless | 20319 | 60 467 | 49 163 |
| **Puffy Lounge Chair + Ottoman** | Velluto Coex VL30/Black Grey | 32039 | 48 507 | 39 434 |
| **Puffy Lounge Chair + Ottoman** | Velluto Coex VL30/Cream | 32040 | 48 507 | 39 434 |
| **Puffy Lounge Chair + Ottoman** | Velluto Coex VL30/Stainless | 32041 | 56 672 | 46 081 |
| **Puffy Ottoman** | Anthracite / Black Grey | 20290 | 11 719 | 9 522 |
| **Puffy Ottoman** | Anthracite / Cream | 20293 | 11 719 | 9 522 |
| **Puffy Ottoman** | Anthracite / Stainless | 20287 | 14 134 | 11 489 |
| **Puffy Ottoman** | Black Leather / Black Grey | 20353 | 16 434 | 13 363 |
| **Puffy Ottoman** | Black Leather / Cream | 20354 | 16 434 | 13 363 |
| **Puffy Ottoman** | Black Leather / Stainless | 20352 | 18 849 | 15 330 |
| **Puffy Ottoman** | Eggshell / Black Grey | 20302 | 14 134 | 11 489 |
| **Puffy Ottoman** | Eggshell / Cream | 20303 | 14 134 | 11 489 |
| **Puffy Ottoman** | Eggshell / Stainless | 20301 | 16 434 | 13 363 |
| **Puffy Ottoman** | Elmosoft Leather 03009 / Black Grey | 90161 | 16 434 | 13 363 |
| **Puffy Ottoman** | Elmosoft Leather 03009 / Cream | 90143 | 16 434 | 13 363 |
| **Puffy Ottoman** | Elmosoft Leather 03009 / Stainless | 90215 | 18 849 | 15 330 |
| **Puffy Ottoman** | Elmosoft Leather 54035 / Black Grey | 90160 | 16 434 | 13 363 |
| **Puffy Ottoman** | Elmosoft Leather 54035 / Cream | 90142 | 16 434 | 13 363 |
| **Puffy Ottoman** | Elmosoft Leather 54035 / Stainless | 90214 | 18 849 | 15 330 |
| **Puffy Ottoman** | Natural / Black Grey | 20289 | 11 719 | 9 522 |
| **Puffy Ottoman** | Natural / Cream | 20292 | 11 719 | 9 522 |
| **Puffy Ottoman** | Natural / Stainless | 20286 | 14 134 | 11 489 |
| **Puffy Ottoman** | Sand Leather / Black Grey | 20291 | 16 434 | 13 363 |
| **Puffy Ottoman** | Sand Leather / Cream | 20294 | 16 434 | 13 363 |
| **Puffy Ottoman** | Sand Leather / Stainless | 20288 | 18 849 | 15 330 |
| **Puffy Ottoman** | Sawdust / Black Grey | 20305 | 14 134 | 11 489 |
| **Puffy Ottoman** | Sawdust / Cream | 20306 | 14 134 | 11 489 |
| **Puffy Ottoman** | Sawdust / Stainless | 20304 | 16 434 | 13 363 |
| **Puffy Ottoman** | Velluto Coex VL30/Black Grey | 31855 | 12 984 | 10 557 |
| **Puffy Ottoman** | Velluto Coex VL30/Cream | 31856 | 12 984 | 10 557 |
| **Puffy Ottoman** | Velluto Coex VL30/Stainless Steel | 31857 | 15 284 | 12 420 |
| **Graded-in Textile*** | | | | |
| **Puffy Lounge Chair** | Powder Coated PG1 | | 32 764 | 26 634 |
| **Puffy Lounge Chair** | Powder Coated PG2 | | 34 259 | 27 853 |
| **Puffy Lounge Chair** | Powder Coated PG3 | | 35 294 | 28 693 |
| **Puffy Lounge Chair** | Powder Coated PG4 | | 36 329 | 29 532 |
| **Puffy Lounge Chair** | Powder Coated PG5 | | 37 824 | 30 751 |
| **Puffy Lounge Chair** | Powder Coated PG6 | | 39 779 | 32 338 |
| **Puffy Lounge Chair** | Stainless Steel PG1 | | 38 054 | 30 935 |
| **Puffy Lounge Chair** | Stainless Steel PG2 | | 39 549 | 32 154 |
| **Puffy Lounge Chair** | Stainless Steel PG3 | | 40 584 | 32 994 |
| **Puffy Lounge Chair** | Stainless Steel PG4 | | 41 619 | 33 833 |
| **Puffy Lounge Chair** | Stainless Steel PG5 | | 43 114 | 35 052 |
| **Puffy Lounge Chair** | Stainless Steel PG6 | | 45 069 | 36 639 |

*Please make sure to check pro.hem.com for the most up to date information on finishes and stock availability.

# Puffy Lounge Chair — Price List

| Product name | Finish | SKU | Retail Price SEK | List Price SEK (ex VAT) |
|---|---|---|---|---|
| **Graded-in Textile*** | | | | |
| **Puffy Ottoman** | Powder Coated PG1 | | 11 949 | 9 718 |
| **Puffy Ottoman** | Powder Coated PG2 | | 12 524 | 10 178 |
| **Puffy Ottoman** | Powder Coated PG3 | | 12 869 | 10 465 |
| **Puffy Ottoman** | Powder Coated PG4 | | 13 214 | 10 741 |
| **Puffy Ottoman** | Powder Coated PG5 | | 13 789 | 11 213 |
| **Puffy Ottoman** | Powder Coated PG6 | | 14 594 | 11 868 |
| **Puffy Ottoman** | Stainless Steel PG1 | | 14 364 | 11 673 |
| **Puffy Ottoman** | Stainless Steel PG2 | | 14 939 | 12 144 |
| **Puffy Ottoman** | Stainless Steel PG3 | | 15 284 | 12 420 |
| **Puffy Ottoman** | Stainless Steel PG4 | | 15 629 | 12 708 |
| **Puffy Ottoman** | Stainless Steel PG5 | | 16 204 | 13 179 |
| **Puffy Ottoman** | Stainless Steel PG6 | | 16 894 | 13 731 |



*Please make sure to check pro.hem.com for the most up to date information on finishes and stock availability.

# Touchwood Bar Chair

*Design by Lars Beller Fjetland*

Subtle, strong, and elemental, the Touchwood Chair reflects designer Lars Beller Fjetland's belief that interacting with natural materials is of huge importance. Neither unnecessary decorations nor extraneous components should interrupt the simple relationship between material and user. The beechwood is molded into a continuous shape, making it contract grade durable, while preserving its flexibility. All variants of the Touchwood family stack, making them an ideal choice for public spaces or busy homes. If you perceive more than a little influence from classic minimalistic Scandinavian design at play in this hardworking, functional chair, you'd be right! An armchair, counter stool, bar stool and bar chair in a variety of wooden and metal bases, heights and finishes complete the Touchwood Family.

**Upholstery**
*Sera*
by Rohi (Germany)
94% Virgin Wool, 6% Polyamide
>122,000 Martindale
Pilling 4-5
Lightfastness 5-8
Flame resistance EN 1021: Part 1 & 2, BS 5852: Part 1 & 2 (Crib 5), US Cal. TB 117

**Seat material**
*Beech*
Fagus Sylvatica
Stained and Lacquered

*Oak Veneer*
Quercus Robur
Lacquered

*Walnut Veneer*
Juglans Nigra
Lacquered

Wood is a natural material. The color might vary from piece to piece

**Leg material**
*Steel*
Chrome (III) Plated
Powder Coated

**Inside material**
PU foam

**Country of origin**
Latvia

**Tests & certifications**
EN 16139:2013 – L2: Extreme use – Furniture – Strength, durability and safety – Requirements for non-domestic seating

ANSI/BIFMA X5.1-2017 American National Standard For Office Furnishings – General Purpose Office Chairs

**3D model**
3D files of all products are available on the product pages on hem.com

**Canyon**
*Sera (Hem exclusive)*

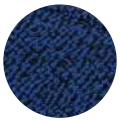

**Cobalt**
*Sera (Hem exclusive)*

**Graphite**
*Sera (Graphit)*

**Calla**
*Sera (Calla)*

**Beech**
*Beech Veneer*
*Beech Core*

**Black**
*Beech Veneer*
*Beech Core*

**Chrome**
*Chrome (III) Plated Steel*

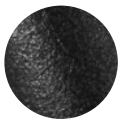

**Black (RAL 9005)**
*Powder Coated Steel*

**Walnut***
*Walnut Veneer*
*Beech Core*

**Oak***
*Oak Veneer*
*Beech Core*

**Samples**
We supply samples of our material finishes. You can order them directly from hem.com/samples

***MTO**
Reach out to your local representative for the full selection of made-to-order options.

**Touchwood Bar Chair**

Side view

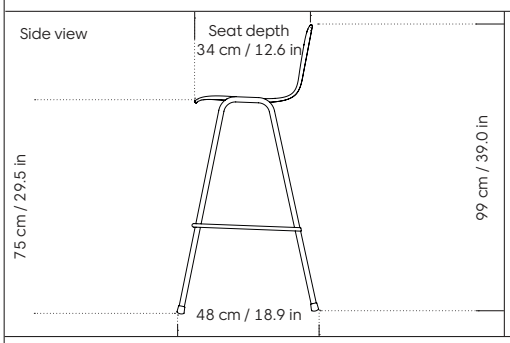


Front view

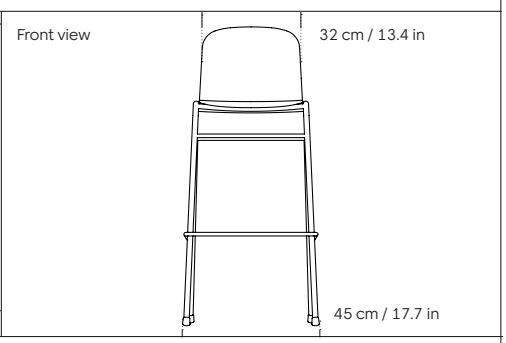


**Stackability**

Touchwood Bar Chair
1 – 7

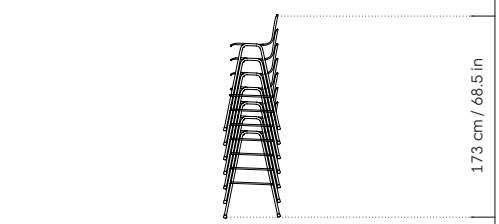


The Touchwood chairs and armchairs are compatible with straight stacking chair trolleys that have a stacking plate/arm no wider than 40cm / 15 3/4". The stacking plate/arm should provide support under the chair's stacking bars, plus vertical support for the chairs to rest on when the stack is tilted back onto the trolley wheels during transport.

# Touchwood Counter Chair

*Design by Lars Beller Fjetland*

Subtle, strong, and elemental, the Touchwood Chair reflects designer Lars Beller Fjetland's belief that interacting with natural materials is of huge importance. Neither unnecessary decorations nor extraneous components should interrupt the simple relationship between material and user. The beechwood is molded into a continuous shape, making it contract grade durable, while preserving its flexibility. All variants of the Touchwood family stack, making them an ideal choice for public spaces or busy homes. If you perceive more than a little influence from classic minimalistic Scandinavian design at play in this hardworking, functional chair, you'd be right! An armchair, counter stool, bar stool and bar chair in a variety of wooden and metal bases, heights and finishes complete the Touchwood Family.

**Upholstery**
*Sera*
by Rohi (Germany)
94% Virgin Wool, 6% Polyamide
>122,000 Martindale
Pilling 4-5
Lightfastness 5-8
Flame resistance EN 1021: Part 1 & 2, BS 5852: Part 1 & 2 (Crib 5), US Cal. TB 117

**Seat material**
*Beech*
Fagus Sylvatica
Stained and Lacquered

*Oak Veneer*
Quercus Robur
Lacquered

*Walnut Veneer*
Juglans Nigra
Lacquered

Wood is a natural material. The color might vary from piece to piece

**Leg material**
*Steel*
Chrome (III) Plated
Powder Coated

**Inside material**
PU foam

**Country of origin**
Latvia

**Tests & certifications**
EN 16139:2013 – L2: Extreme use – Furniture – Strength, durability and safety – Requirements for non-domestic seating

ANSI/BIFMA X5.1-2017 American National Standard For Office Furnishings – General Purpose Office Chairs

**3D model**
3D files of all products are available on the product pages on hem.com

**Canyon**
*Sera (Hem exclusive)*

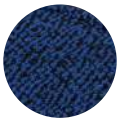

**Cobalt**
*Sera (Hem exclusive)*

**Graphite**
*Sera (Graphit)*

**Calla**
*Sera (Calla)*

**Beech**
*Beech Veneer*
*Beech Core*

**Black**
*Beech Veneer*
*Beech Core*

**Chrome**
*Chrome (III) Plated Steel*

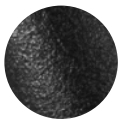

**Black (RAL 9005)**
*Powder Coated Steel*

**Walnut***
*Walnut Veneer*
*Beech Core*

**Oak***
*Oak Veneer*
*Beech Core*

**Samples**
We supply samples of our material finishes. You can order them directly from hem.com/samples

***MTO**
Reach out to your local representative for the full selection of made-to-order options.

**Touchwood Counter Chair**

Side view

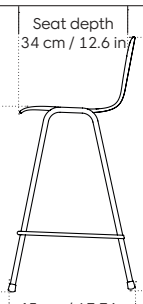


Front view

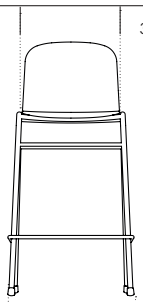


**Stackability**

Touchwood Counter Chair
1 – 7

The Touchwood chairs and armchairs are compatible with straight stacking chair trolleys that have a stacking plate/arm no wider than 40cm / 15 3/4". The stacking plate/arm should provide support under the chair's stacking bars, plus vertical support for the chairs to rest on when the stack is tilted back onto the trolley wheels during transport.

# Touchwood Bar & Counter — Price List

| Product name | Finish | SKU | Retail Price SEK | List Price SEK (ex VAT) |
|---|---|---|---|---|
| **Curated Collection** | | | | |
| **Touchwood Bar Chair** | Beech / Black | 20158 | 4 934 | 4 014 |
| **Touchwood Bar Chair** | Beech / Chrome | 20164 | 4 934 | 4 014 |
| **Touchwood Bar Chair** | Black / Black | 20155 | 4 934 | 4 014 |
| **Touchwood Bar Chair** | Black / Chrome | 20161 | 4 934 | 4 014 |
| **Touchwood Bar Chair** | Calla / Black | 20159 | 5 394 | 4 382 |
| **Touchwood Bar Chair** | Calla / Chrome | 20165 | 5 394 | 4 382 |
| **Touchwood Bar Chair** | Canyon / Black | 20160 | 5 394 | 4 382 |
| **Touchwood Bar Chair** | Canyon / Chrome | 20166 | 5 394 | 4 382 |
| **Touchwood Bar Chair** | Cobalt / Black | 20157 | 5 394 | 4 382 |
| **Touchwood Bar Chair** | Cobalt / Chrome | 20163 | 5 394 | 4 382 |
| **Touchwood Bar Chair** | Graphite / Black | 20156 | 5 394 | 4 382 |
| **Touchwood Bar Chair** | Graphite / Chrome | 20162 | 5 394 | 4 382 |
| **Touchwood Bar Chair** | Oak / Black | 31620 | 5 279 | 4 290 |
| **Touchwood Bar Chair** | Oak / Chrome | 31621 | 5 279 | 4 290 |
| **Touchwood Bar Chair** | Walnut / Black | 31622 | 5 279 | 4 290 |
| **Touchwood Bar Chair** | Walnut / Chrome | 31623 | 5 279 | 4 290 |
| **Touchwood Counter Chair** | Beech / Black | 20182 | 4 934 | 4 014 |
| **Touchwood Counter Chair** | Beech / Chrome | 20188 | 4 934 | 4 014 |
| **Touchwood Counter Chair** | Black / Black | 20179 | 4 934 | 4 014 |
| **Touchwood Counter Chair** | Black / Chrome | 20185 | 4 934 | 4 014 |
| **Touchwood Counter Chair** | Calla / Black | 20183 | 5 394 | 4 382 |
| **Touchwood Counter Chair** | Calla / Chrome | 20189 | 5 394 | 4 382 |
| **Touchwood Counter Chair** | Canyon / Black | 20184 | 5 394 | 4 382 |
| **Touchwood Counter Chair** | Canyon / Chrome | 20190 | 5 394 | 4 382 |
| **Touchwood Counter Chair** | Cobalt / Black | 20181 | 5 394 | 4 382 |
| **Touchwood Counter Chair** | Cobalt / Chrome | 20187 | 5 394 | 4 382 |
| **Touchwood Counter Chair** | Graphite / Black | 20180 | 5 394 | 4 382 |
| **Touchwood Counter Chair** | Graphite / Chrome | 20186 | 5 394 | 4 382 |
| **Touchwood Counter Chair** | Oak / Black | 31636 | 5 279 | 4 290 |
| **Touchwood Counter Chair** | Oak / Chrome | 31637 | 5 279 | 4 290 |
| **Touchwood Counter Chair** | Walnut / Black | 31638 | 5 164 | 4 198 |
| **Touchwood Counter Chair** | Walnut / Chrome | 31639 | 5 164 | 4 198 |
| **Graded-in Textile*** | | | | |
| **Touchwood Bar Chair** | Grade 1 | | 4 934 | 4 014 |
| **Touchwood Bar Chair** | Grade 2 | | 5 394 | 4 382 |
| **Touchwood Bar Chair** | Grade 3 | | 5 624 | 4 577 |
| **Touchwood Bar Chair** | Grade 4 | | 5 854 | 4 761 |
| **Touchwood Bar Chair** | Grade 5 | | 6 199 | 5 037 |
| **Touchwood Bar Chair** | Grade 6 | | 6 774 | 5 509 |
| **Touchwood Counter Chair** | Grade 1 | | 4 934 | 4 014 |
| **Touchwood Counter Chair** | Grade 2 | | 5 394 | 4 382 |
| **Touchwood Counter Chair** | Grade 3 | | 5 624 | 4 577 |
| **Touchwood Counter Chair** | Grade 4 | | 5 854 | 4 761 |
| **Touchwood Counter Chair** | Grade 5 | | 6 199 | 5 037 |
| **Touchwood Counter Chair** | Grade 6 | | 6 774 | 5 509 |

*Please make sure to check pro.hem.com for the most up to date information on finishes and stock availability.

# Touchwood Chair

*Design by Lars Beller Fjetland*

Subtle, strong, and elemental, the Touchwood Chair reflects designer Lars Beller Fjetland's belief that interacting with natural materials is of huge importance. Neither unnecessary decorations nor extraneous components should interrupt the simple relationship between material and user. The beechwood is molded into a continuous shape, making it contract grade durable, while preserving its flexibility. All variants of the Touchwood family stack, making them an ideal choice for public spaces or busy homes. If you perceive more than a little influence from classic minimalistic Scandinavian design at play in this hardworking, functional chair, you'd be right! An armchair, counter stool, bar stool and bar chair in a variety of wooden and metal bases, heights and finishes complete the Touchwood Family.

**Material**
*Beech*
Fagus Sylvatica
Stained and Lacquered

*Oak Veneer*
Quercus Robur
Lacquered

*Walnut Veneer*
Juglans Nigra
Lacquered

Wood is a natural material. The color might vary from piece to piece

**Country of origin**
Latvia

**Tests & certifications**
EN 16139:2013 – L2: Extreme use – Furniture – Strength, durability and safety – Requirements for non-domestic seating

ANSI/BIFMA X5.4-2012 American National Standard for Office Furnishings – Lounge and Public Seating

**3D model**
3D files of all products are available on the product pages on hem.com

**Beech**
*Beech Veneer*
*Beech Core*

**Black**
*Beech Veneer*
*Beech Core*

**Walnut**
*Walnut Veneer*
*Beech Core*

**Oak***
*Oak Veneer*
*Beech Core*

**Samples**
We supply samples of our material finishes. You can order them directly from hem.com/samples

***MTO**
Reach out to your local representative for the full selection of made-to-order options.

**Touchwood Chair**

Side view

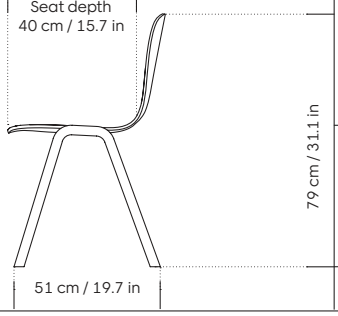


Front view

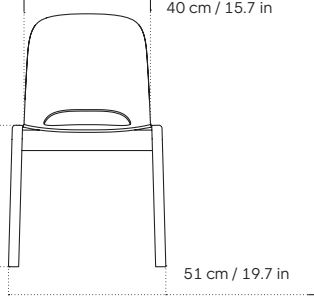


**Stackability**

Touchwood Chair
1 – 6

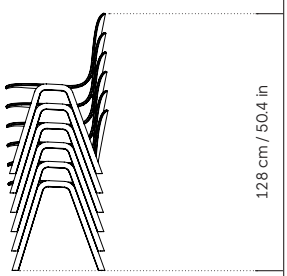


The Touchwood chairs and armchairs are compatible with straight stacking chair trolleys that have a stacking plate/arm no wider than 40cm / 15 3/4". The stacking plate/arm should provide support under the chair's stacking bars, plus vertical support for the chairs to rest on when the stack is tilted back onto the trolley wheels during transport.

# Touchwood Chair

*Design by Lars Beller Fjetland*

Subtle, strong, and elemental, the Touchwood Chair reflects designer Lars Beller Fjetland's belief that interacting with natural materials is of huge importance. Neither unnecessary decorations nor extraneous components should interrupt the simple relationship between material and user. The beechwood is molded into a continuous shape, making it contract grade durable, while preserving its flexibility. All variants of the Touchwood family stack, making them an ideal choice for public spaces or busy homes. If you perceive more than a little influence from classic minimalistic Scandinavian design at play in this hardworking, functional chair, you'd be right! An armchair, counter stool, bar stool and bar chair in a variety of wooden and metal bases, heights and finishes complete the Touchwood Family.

**Upholstery**
*Sera*
by Rohi (Germany)
94% Virgin Wool, 6% Polyamide
>122,000 Martindale
Pilling 4-5
Lightfastness 5-8
Flame resistance EN 1021: Part 1 & 2, BS 5852: Part 1 & 2 (Crib 5), US Cal. TB 117

**Seat material**
*Beech*
Fagus Sylvatica
Stained and Lacquered

*Oak Veneer*
Quercus Robur
Lacquered

*Walnut Veneer*
Juglans Nigra
Lacquered

Wood is a natural material. The color might vary from piece to piece

**Leg material**
*Steel*
Chrome (III) Plated
Powder Coated

**Inside material**
PU foam

**Country of origin**
Latvia

**Canyon**
*Sera (Hem exclusive)*

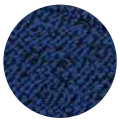

**Cobalt**
*Sera (Hem exclusive)*

**Graphite**
*Sera (Graphit)*

**Calla**
*Sera (Calla)*

**Beech**
*Beech Veneer*
*Beech Core*

**Black**
*Beech Veneer*
*Beech Core*

**Chrome**
*Chrome (III) Plated Steel*

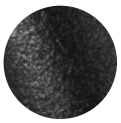

**Black (RAL 9005)**
*Powder Coated Steel*

**Walnut**
*Walnut Veneer*
*Beech Core*

**Oak***
*Oak Veneer*
*Beech Core*

**Samples**
We supply samples of our material finishes. You can order them directly from hem.com/samples

***MTO**
Reach out to your local representative for the full selection of made-to-order options.

**Touchwood Chair**

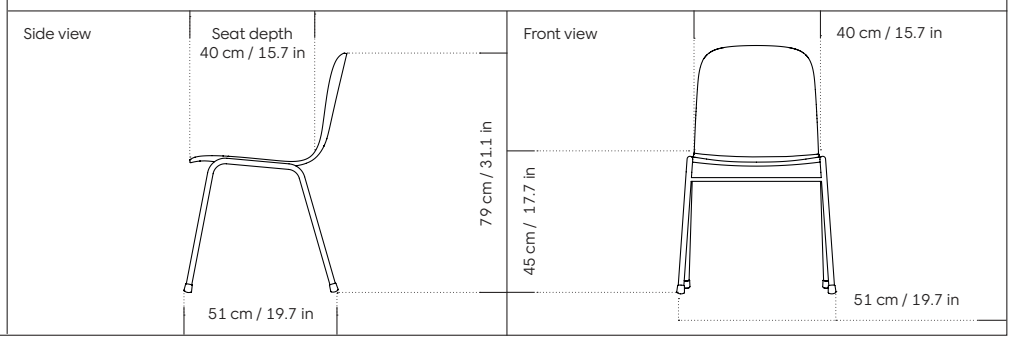

| **Tests & certifications** | **Stackability** | |
|---|---|---|
| EN 16139:2013 – L2: Extreme use – Furniture – Strength, durability and safety – Requirements for non-domestic seating<br><br>ANSI/BIFMA X5.4-2012 American National Standard for Office Furnishings – Lounge and Public Seating<br><br>**3D model**<br>3D files of all products are available on the product pages on hem.com | Touchwood Chair<br>1 – 15<br> 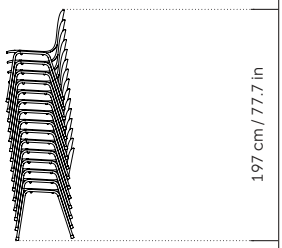 | The Touchwood chairs and armchairs are compatible with straight stacking chair trolleys that have a stacking plate/arm no wider than 40cm / 15 3/4". The stacking plate/arm should provide support under the chair's stacking bars, plus vertical support for the chairs to rest on when the stack is tilted back onto the trolley wheels during transport. |

# Touchwood Chairs — Price List

| Product name | Finish | SKU | Retail Price SEK | List Price SEK (ex VAT) |
|---|---|---|---|---|
| **Curated Collection** | | | | |
| **Touchwood Chair** | Beech / Black | 20122 | 4 474 | 3 634 |
| **Touchwood Chair** | Beech / Chrome | 20128 | 4 474 | 3 634 |
| **Touchwood Chair** | Black / Black | 20119 | 4 474 | 3 634 |
| **Touchwood Chair** | Black / Chrome | 20125 | 4 474 | 3 634 |
| **Touchwood Chair** | Calla / Black | 20123 | 5 854 | 4 761 |
| **Touchwood Chair** | Calla / Chrome | 20129 | 5 854 | 4 761 |
| **Touchwood Chair** | Canyon / Black | 20124 | 5 854 | 4 761 |
| **Touchwood Chair** | Canyon / Chrome | 20130 | 5 854 | 4 761 |
| **Touchwood Chair** | Cobalt / Black | 20121 | 5 854 | 4 761 |
| **Touchwood Chair** | Cobalt / Chrome | 20127 | 5 854 | 4 761 |
| **Touchwood Chair** | Graphite / Black | 20120 | 5 854 | 4 761 |
| **Touchwood Chair** | Graphite / Chrome | 20126 | 5 854 | 4 761 |
| **Touchwood Chair** | Oak / Black | 31630 | 4 819 | 3 922 |
| **Touchwood Chair** | Oak / Chrome | 31631 | 4 819 | 3 922 |
| **Touchwood Chair** | Walnut / Black | 31632 | 4 934 | 4 014 |
| **Touchwood Chair** | Walnut / Chrome | 31633 | 4 934 | 4 014 |
| **Touchwood Chair (Wooden legs)** | Beech | 30064 | 4 704 | 3 830 |
| **Touchwood Chair (Wooden legs)** | Black | 30090 | 4 704 | 3 830 |
| **Touchwood Chair (Wooden legs)** | Oak | 31634 | 5 049 | 4 106 |
| **Touchwood Chair (Wooden legs)** | Walnut | 31635 | 5 509 | 4 474 |
| **Graded-in Textile*** | | | | |
| **Touchwood Chair** | Grade 1 | | 5 394 | 4 382 |
| **Touchwood Chair** | Grade 2 | | 5 854 | 4 761 |
| **Touchwood Chair** | Grade 3 | | 6 084 | 4 945 |
| **Touchwood Chair** | Grade 4 | | 6 314 | 5 129 |
| **Touchwood Chair** | Grade 5 | | 6 659 | 5 417 |
| **Touchwood Chair** | Grade 6 | | 7 234 | 5 877 |

*Please make sure to check pro.hem.com for the most up to date information on finishes and stock availability.

# Udon Chair

*Design by Staffan Holm*

Udon is effortlessly charming—a seemingly simple chair. In reality, a huge amount of skill underlies this contemporary classic's form. Designer Staffan Holm took inspiration from archetypal bentwood chairs and borrowed traditional Japanese carpentry traditions, and used just a few simple joints to maintain a clean line and open structure. Colored wood stains accentuate a lively wood grain, and a generous seat promises a comfortable sit. The Udon Chair Upholstered features the highest-quality Scandinavian leather, adding yet another layer of comfort and elegance.

**Leg material**
*Beech*
Fagus Sylvatica
Stained and Lacquered

Wood is a natural material. The color might vary from piece to piece

**Upholstery**
*Elmosoft Leather*
by Elmo (Sweden)
Scandinavian Grain Leather, Semi-aniline

**Inside material**
PU foam

**Country of origin**
Latvia

**Tests & certifications**
EN 16139:2013 – L1: General Use – Furniture – Strength, durability and safety – Requirements for non-domestic seating

**3D model**
3D files of all products are available on the product pages on hem.com

**Natural**
*Beech*

**Black**
*Beech*

**Black**
*Elmosoft Leather (99999)*

**Cognac**
*Elmosoft Leather (54035)*

**Samples**
We supply samples of our material finishes. You can order them directly from hem.com/samples

**MTO**
Please refer to the price list or reach out to your local representative for our made-to-order options

**Udon Chair**

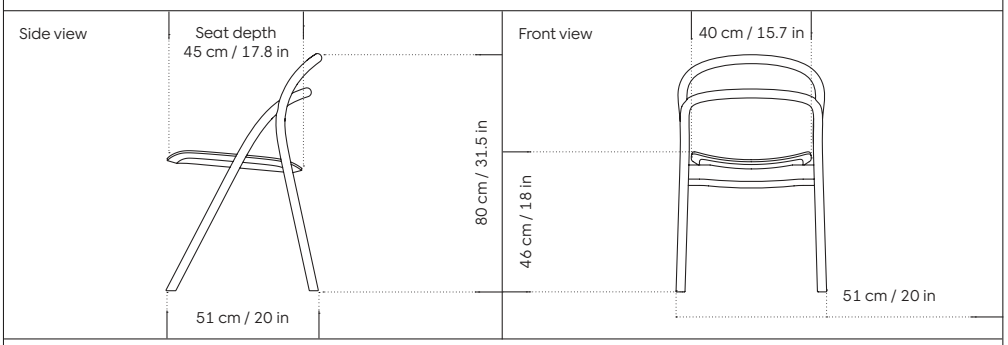


**Udon Chair Upholstered**

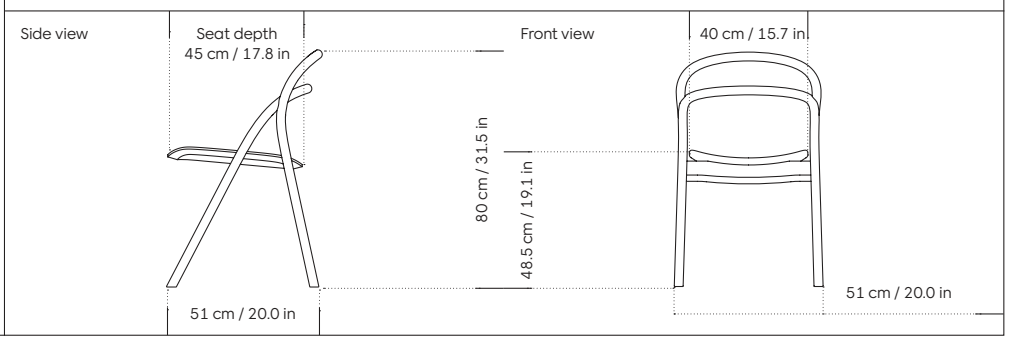

# Udon Chair — Price List

| Product name | Finish | SKU | Retail Price SEK | List Price SEK (ex VAT) |
|---|---|---|---|---|
| **Curated Collection** | | | | |
| **Udon Chair** | Black | 14159 | 6 889 | 5 601 |
| **Udon Chair** | Black / Black Leather | 30176 | 9 074 | 7 372 |
| **Udon Chair** | Natural | 14158 | 6 889 | 5 601 |
| **Udon Chair** | Natural / Cognac Leather | 30177 | 9 074 | 7 372 |

# Sofas

# Poufs

**We are a little obsessive about the quality of our upholstered furniture. Our sofas and poufs are designed with ingenuity, built to last, and easy to assemble, plus they can grow and evolve with you. They are comfort personified.**

# Boa Pouf

*Design by Sabine Marcelis*

The donut-shaped Boa Pouf by Sabine Marcelis is perfectly sculptural; a bold graphic form that interrupts interior landscapes with its faultless chunky geometry. This piece of upholstered occasional furniture is rounded and soft, encased in a seamless outer layer that gives it an air-brushed finish: The smooth shape-knit textile that covers the Boa Pouf is a milestone in technologically innovative furniture making. Boa Pouf is as perfect for perching on, propping up feet, lounging against, as it is for making a sculptural statement and is the ideal expression of designer Sabine Marcelis, whose work is characterised by resonating clear, single, notes of absolute material, textile and colour.

**Upholstery**
*Hem exclusive*
by Kobleder (Austria)
80% Wool, 20% Nylon
>100,000 Martindale
Pilling 2-3
Lightfastness 5-6
Flame resistance EN 1021: Part 1 & 2, BS 5852: Part 1, US Cal. TB 117

**Inside material**
PU foam
Wooden Structure

**Country of origin**
Poland

**3D model**
3D files of all products are available on the product pages on hem.com

**Sulfur Yellow**
*(Hem exclusive)*

**Cotton Candy**
*(Hem exclusive)*

**Oatmeal**
*(Hem exclusive)*

**Pine Green**
*(Hem exclusive)*

**Samples**
We supply samples of our material finishes. You can order them directly from hem.com/samples

**Boa Pouf**

Top view

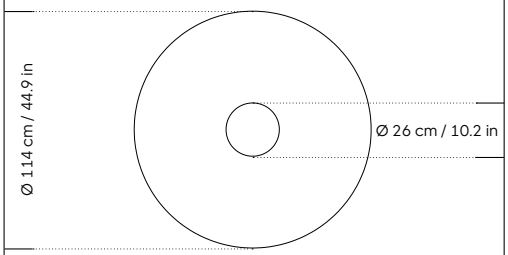


Side view

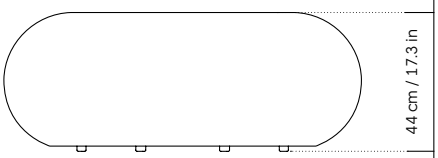

# Boa Pouf — Price List

| Product name | Finish | SKU | Retail Price SEK | List Price SEK (ex VAT) |
|---|---|---|---|---|
| **Curated Collection** | | | | |
| **Boa Pouf** | Cotton Candy | 30494 | 23 449 | 19 067 |
| **Boa Pouf** | Oatmeal | 30495 | 23 449 | 19 067 |
| **Boa Pouf** | Pine Green | 30709 | 23 449 | 19 067 |
| **Boa Pouf** | Sulfur Yellow | 30493 | 23 449 | 19 067 |

# Bon Pouf Round

*Design by Hem*

The Bon Pouf is ideal for perching upon or supporting tired feet; keep it on hand for any number of uses as an occasional seat, prop, or table. These versatile upholstered ottomans work equally well solo, as a single splash of color and softness, or in a gaggle. A mixed group of Bon Poufs in various sizes creates an interesting landscape of softness across any space. Select a shape that works for you, then choose your upholstery pattern and color (we often make smart reuse of textile offcuts here) to begin your collection.

**Upholstery**
*Razzle Dazzle*
by Kvadrat (Netherlands)
60% New wool, 20% Nylon, 20% Polyester
>100,000 Martindale
Pilling 4
Lightfastness 6
Flame resistance EN 1021: Part 1 & 2, BS 5852: Part 1, US Cal. TB 117

*Uniform Mélange*
by Kvadrat (Netherlands)
68% New wool, 22% Nylon, 10% Polyester
100,000 Martindale
Pilling 4
Lightfastness 6
Flame resistance EN 1021: Part 1 & 2, BS 5852: Part 1, US Cal. TB 117

*Bute Storr*
by Bute Fabrics (Scotland)
97 % Pure New Wool, 3% Nylon
65,000 Martindale
Lightfastness 5
Flame resistance IMO FTP Code(2010) Annex 1, Part 8, BS 5852: Part 1 & 2 (Crib 5), US Cal. TB 121

*Gentle 2*
by Kvadrat (Netherlands)
60% New wool, 20% Nylon, 20% Polyester
90,000 Martindale
Pilling 4-5
Lightfastness 6-7
Flame resistance EN 1021: Part 1 & 2, BS 5852: Part 1, US Cal. TB 117

**Inside material**
PU foam
Wooden structure

**Country of origin**
Lithuania

**3D model**
3D files of all products are available on the product pages on hem.com

**Blossom**
*Razzle Dazzle (0636)*

**Ginger**
*Razzle Dazzle (0466)*

**Flame**
*Razzle Dazzle (0556)*

**Honey**
*Razzle Dazzle (0436)*

**Shell**
*Uniform Mélange (0103)*

**Ink**
*Uniform Mélange (0793)*

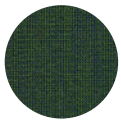

**Peacock**
*Uniform Mélange (0983)*

**Eggshell**
*Bute Storr Eggshell*

**Sawdust**
*Bute Storr Sawdust*

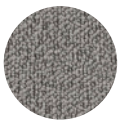

**Pebble**
*Bute Storr Pebble*

**Rust Red**
*Gentle 2 (0373)*

**Light Blue**
*Gentle 2 (0733)*

**Red**
*Gentle 2 (0553)*

**Ochre**
*Gentle 2 (0442)*

**Blue**
*Gentle 2 (0753)*

**Samples**
We supply samples of our material finishes. You can order them directly from hem.com/samples

**Graded-in Textile and Made-To-Order**
Reach out to your local representative for the full selection of made-to-order options.

**Bon Pouf Round**

Top view

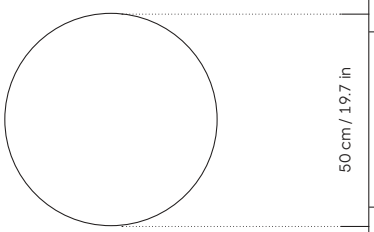


Side view

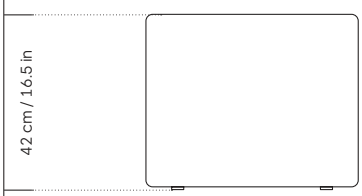

# Bon Pouf — Price List

| Product name | Finish | SKU | Retail Price SEK | List Price SEK (ex VAT) |
|---|---|---|---|---|
| **Curated Collection** | | | | |
| **Bon Pouf Round** | Blossom | 30017 | 6 084 | 4 945 |
| **Bon Pouf Round** | Blue | 30503 | 9 534 | 7 751 |
| **Bon Pouf Round** | Eggshell | 30502 | 7 119 | 5 785 |
| **Bon Pouf Round** | Flame | 30168 | 6 084 | 4 945 |
| **Bon Pouf Round** | Gentle 2 0373 | 31570 | 9 534 | 7 751 |
| **Bon Pouf Round** | Ginger | 30014 | 6 084 | 4 945 |
| **Bon Pouf Round** | Honey | 30296 | 6 084 | 4 945 |
| **Bon Pouf Round** | Ink | 30012 | 6 084 | 4 945 |
| **Bon Pouf Round** | Light Blue | 30504 | 9 534 | 7 751 |
| **Bon Pouf Round** | Ochre | 30505 | 9 534 | 7 751 |
| **Bon Pouf Round** | Peacock | 30019 | 6 084 | 4 945 |
| **Bon Pouf Round** | Red | 30506 | 9 534 | 7 751 |
| **Bon Pouf Round** | Sawdust | 30507 | 7 119 | 5 785 |
| **Bon Pouf Round** | Shell | 30009 | 6 084 | 4 945 |
| **Bon Pouf Round** | Storr 0612 | 31569 | 7 119 | 5 785 |
| **Graded-in Textile*** | | | | |
| **Bon Pouf Round** | Grade 1 | | 5 164 | 4 198 |
| **Bon Pouf Round** | Grade 2 | | 5 624 | 4 577 |
| **Bon Pouf Round** | Grade 3 | | 5 969 | 4 853 |
| **Bon Pouf Round** | Grade 4 | | 6 199 | 5 037 |
| **Bon Pouf Round** | Grade 5 | | 6 659 | 5 417 |
| **Bon Pouf Round** | Grade 6 | | 7 234 | 5 877 |

*Please make sure to check pro.hem.com for the most up to date information on finishes and stock availability.

# Great Sofa - Product Details

*Design by Philippe Malouin*

The Great Sofa lives up to its monumental name. Great in scale; more landscape than furniture, an expansive archipelago of soft upholstery upon which to retreat. Great in looks; the sofa broadcasts its relaxez-vous informality with loose-fit covers that adapt to your body, crumple and cosset - nothing is uptight or rigid about Great Sofa. Great Sofa excels in concept too; easy-to-fit-and-remove covers aid effortless cleaning and offer longevity. No tools are needed for assembly. Plus, our modular system facilitates endless configurations for laidback, feet-up luxury. Corners, islands, conversation pits welcome.

**Upholstery**
*Cifrado*
by Kvadrat/Sahco (Denmark)
42% recycled polyester, 27% viscose, 24% recycled cotton, 7% linen
30,000 Martindale
Pilling 5
Lightfastness 5-6
Flame resistance EN 1021: Part 1 & 2, US Cal. TB 117-2013, IMO 2010 FTP Code Part 8

*Safire*
by Kvadrat/Sahco (Denmark)
43% viscose, 17% polyacrylic, 15% new wool, 9% cotton, 8% polyester, 8% linen
40,000 Martindale
Pilling 3
Lightfastness 5-6
Flame resistance BS 5852: Part 1, EN 1021: Part 1 & 2, US Cal. TB 117-2013, IMO 2010 FTP Code Part 8

*Autumn*
by Kvadrat (Denmark)
100% Recycled Polyester
50,000 Martindale
Pilling 4-5
Lightfastness 6-7
Flame resistance ASTM E 84 Adhered, ASTM E84 Class A Unadhered, EN 1021: Part 1 & 2, IMO 2010 FTP Code Part 8, US Cal. TB 117-2013

**Leg material**
*Birch wood*
*Painted*

**Inside material**
PU foam
Wooden structure

**Country of origin**
Lithuania

**Tests & certifications**
EN 16139:2013 – L2: Extreme use – Furniture Strength, durability and safety – Requirements for non-domestic

**Product accessory**
Great Cushion

**3D model**
3D files of all products are available on the product pages on hem.com

**Cifrado**
*0381*


**Cifrado**
*0111*

**Cifrado**
*0901*

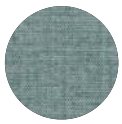
**Cifrado**
*0741*

**Safire**
*0003*

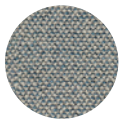
**Safire**
*0012*

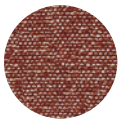
**Safire**
*0013*

**Safire**
*0014*

**Safire**
*0007*

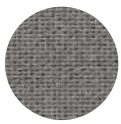
**Autumn**
*0131*

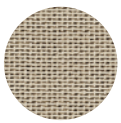
**Autumn**
*0221*

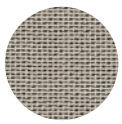
**Autumn**
*0331*

**Autumn**
*0971*

**Autumn**
*0361*

**Samples**
We supply samples of our material finishes. You can order them directly from hem.com/samples

**Graded-in Textile and Made-To-Order**
Reach out to your local representative for the full selection of made-to-order options.

**Great Sofa Ottoman**

Top view

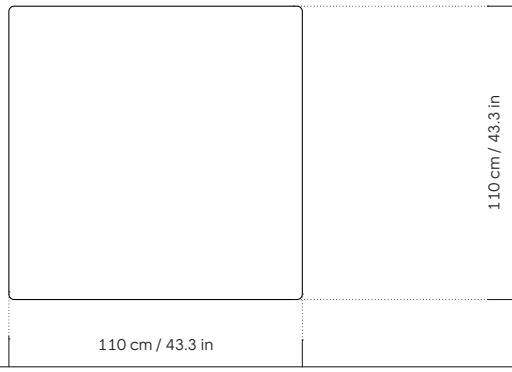


Front view

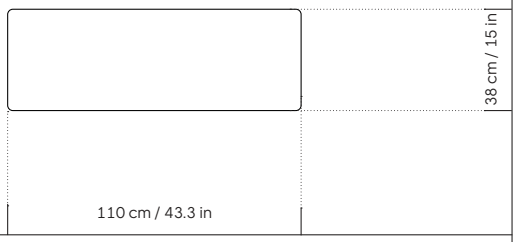


**Great Sofa Extension Module**

Top view

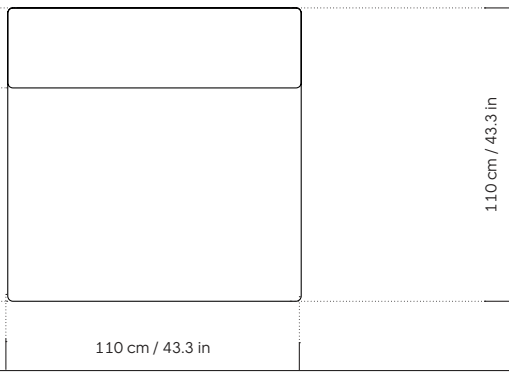


Front view

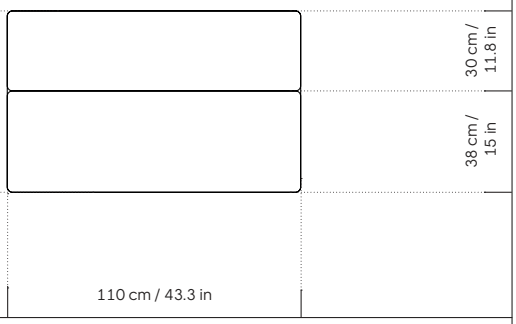


**Great Sofa Extension Module Narrow**

Top view

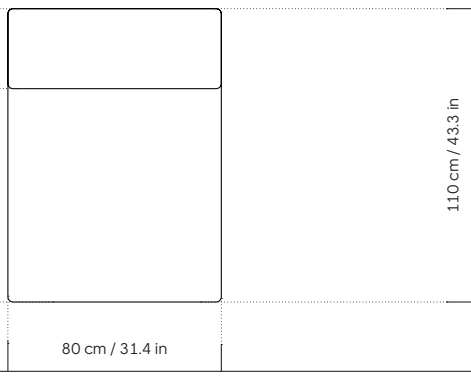


Front view

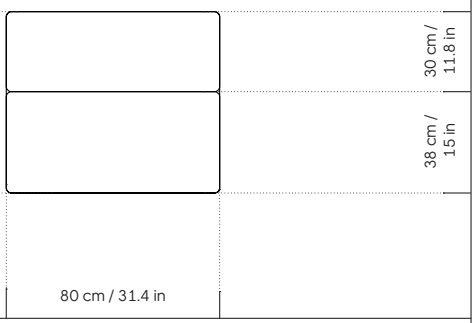


**Great Sofa Corner Module**

Top view

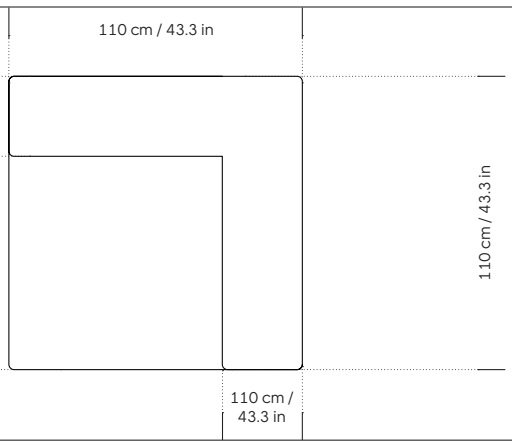


Front view

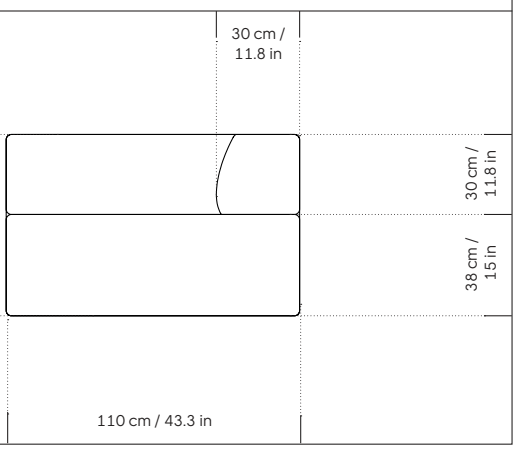

# Great Sofa - Variant Overview

This is a modular product that can be configured freely to fit your needs. All variants consist of either the Great Sofa Corner Module, Great Sofa Extension Module, Great Sofa Extension Module Narrow or Great Sofa Ottoman.
For custom configurations reach out to info@hem.com for assistance.

Great Sofa Ottoman

Great Sofa Extension Module

Great Sofa Extension Module Narrow

Great Sofa Corner Module

Great 2-seater Sofa

Great 3-seater Sofa

Great 3-seater Sofa Narrow

Great 3-seater Sofa Corner Right

Great 3-seater Sofa Corner Left

Great 3-seater Sofa Chaise Right

Great 3-seater Sofa Chaise Left

Great 3-seater Sofa Narrow Corner Right

Great 3-seater Sofa Narrow Corner Left

Great 3-Seater Sofa Narrow Chaise Right

Great 3-seater Sofa Narrow Chaise Left

# Great — Price List

| Product name | Finish | SKU | Retail Price SEK | List Price SEK (ex VAT) |
|---|---|---|---|---|
| **Curated Collection** | | | | |
| **Great 2-seater Sofa** | Autumn 0131 | 92383 | 49 324 | 40 101 |
| **Great 2-seater Sofa** | Autumn 0221 | 92384 | 49 324 | 40 101 |
| **Great 2-seater Sofa** | Autumn 0331 | 92385 | 49 324 | 40 101 |
| **Great 2-seater Sofa** | Autumn 0361 | 20881 | 49 324 | 40 101 |
| **Great 2-seater Sofa** | Autumn 0971 | 92386 | 49 324 | 40 101 |
| **Great 2-seater Sofa** | Cifrado 0111 | 92387 | 73 934 | 60 111 |
| **Great 2-seater Sofa** | Cifrado 0381 | 20899 | 73 934 | 60 111 |
| **Great 2-seater Sofa** | Cifrado 0741 | 20971 | 73 934 | 60 111 |
| **Great 2-seater Sofa** | Cifrado 0901 | 92388 | 73 934 | 60 111 |
| **Great 2-seater Sofa** | Safire 0003 | 92389 | 68 069 | 55 338 |
| **Great 2-seater Sofa** | Safire 0007 | 20912 | 68 069 | 55 338 |
| **Great 2-seater Sofa** | Safire 0012 | 92390 | 68 069 | 55 338 |
| **Great 2-seater Sofa** | Safire 0013 | 92392 | 68 069 | 55 338 |
| **Great 2-seater Sofa** | Safire 0014 | 92391 | 68 069 | 55 338 |
| **Great 3-seater Sofa** | Autumn 0131 | 92403 | 70 369 | 57 213 |
| **Great 3-seater Sofa** | Autumn 0221 | 92404 | 70 369 | 57 213 |
| **Great 3-seater Sofa** | Autumn 0331 | 92405 | 70 369 | 57 213 |
| **Great 3-seater Sofa** | Autumn 0361 | 20882 | 70 369 | 57 213 |
| **Great 3-seater Sofa** | Autumn 0971 | 92406 | 70 369 | 57 213 |
| **Great 3-seater Sofa** | Cifrado 0111 | 92407 | 105 559 | 85 825 |
| **Great 3-seater Sofa** | Cifrado 0381 | 20900 | 105 559 | 85 825 |
| **Great 3-seater Sofa** | Cifrado 0741 | 20970 | 105 559 | 85 825 |
| **Great 3-seater Sofa** | Cifrado 0901 | 92408 | 105 559 | 85 825 |
| **Great 3-seater Sofa** | Safire 0003 | 92409 | 93 254 | 75 820 |
| **Great 3-seater Sofa** | Safire 0007 | 20915 | 93 254 | 75 820 |
| **Great 3-seater Sofa** | Safire 0012 | 92410 | 93 254 | 75 820 |
| **Great 3-seater Sofa** | Safire 0013 | 92412 | 93 254 | 75 820 |
| **Great 3-seater Sofa** | Safire 0014 | 92411 | 93 254 | 75 820 |
| **Great 3-seater Sofa Chaise Left** | Autumn 0131 | 92423 | 86 814 | 70 576 |
| **Great 3-seater Sofa Chaise Left** | Autumn 0221 | 92424 | 86 814 | 70 576 |
| **Great 3-seater Sofa Chaise Left** | Autumn 0331 | 92425 | 86 814 | 70 576 |
| **Great 3-seater Sofa Chaise Left** | Autumn 0361 | 20886 | 86 814 | 70 576 |
| **Great 3-seater Sofa Chaise Left** | Autumn 0971 | 92426 | 86 814 | 70 576 |
| **Great 3-seater Sofa Chaise Left** | Cifrado 0111 | 92427 | 132 584 | 107 790 |
| **Great 3-seater Sofa Chaise Left** | Cifrado 0381 | 20901 | 132 584 | 107 790 |
| **Great 3-seater Sofa Chaise Left** | Cifrado 0741 | 20976 | 132 584 | 107 790 |
| **Great 3-seater Sofa Chaise Left** | Cifrado 0901 | 92428 | 132 584 | 107 790 |
| **Great 3-seater Sofa Chaise Left** | Safire 0003 | 92429 | 117 289 | 95 358 |
| **Great 3-seater Sofa Chaise Left** | Safire 0007 | 20916 | 117 289 | 95 358 |
| **Great 3-seater Sofa Chaise Left** | Safire 0012 | 92430 | 117 289 | 95 358 |
| **Great 3-seater Sofa Chaise Left** | Safire 0013 | 92432 | 117 289 | 95 358 |
| **Great 3-seater Sofa Chaise Left** | Safire 0014 | 92431 | 117 289 | 95 358 |
| **Great 3-seater Sofa Chaise Right** | Autumn 0131 | 92443 | 86 814 | 70 576 |
| **Great 3-seater Sofa Chaise Right** | Autumn 0221 | 92444 | 86 814 | 70 576 |
| **Great 3-seater Sofa Chaise Right** | Autumn 0331 | 92445 | 86 814 | 70 576 |
| **Great 3-seater Sofa Chaise Right** | Autumn 0361 | 20887 | 86 814 | 70 576 |
| **Great 3-seater Sofa Chaise Right** | Autumn 0971 | 92446 | 86 814 | 70 576 |
| **Great 3-seater Sofa Chaise Right** | Cifrado 0111 | 92447 | 132 584 | 107 790 |
| **Great 3-seater Sofa Chaise Right** | Cifrado 0381 | 20902 | 132 584 | 107 790 |
| **Great 3-seater Sofa Chaise Right** | Cifrado 0741 | 20977 | 132 584 | 107 790 |
| **Great 3-seater Sofa Chaise Right** | Cifrado 0901 | 92448 | 132 584 | 107 790 |
| **Great 3-seater Sofa Chaise Right** | Safire 0003 | 92449 | 117 289 | 95 358 |
| **Great 3-seater Sofa Chaise Right** | Safire 0007 | 20917 | 117 289 | 95 358 |
| **Great 3-seater Sofa Chaise Right** | Safire 0012 | 92450 | 117 289 | 95 358 |
| **Great 3-seater Sofa Chaise Right** | Safire 0013 | 92452 | 117 289 | 95 358 |
| **Great 3-seater Sofa Chaise Right** | Safire 0014 | 92451 | 117 289 | 95 358 |
| **Great 3-seater Sofa Corner Left** | Autumn 0131 | 92463 | 90 379 | 73 474 |
| **Great 3-seater Sofa Corner Left** | Autumn 0221 | 92464 | 90 379 | 73 474 |
| **Great 3-seater Sofa Corner Left** | Autumn 0331 | 92465 | 90 379 | 73 474 |
| **Great 3-seater Sofa Corner Left** | Autumn 0361 | 20890 | 90 379 | 73 474 |
| **Great 3-seater Sofa Corner Left** | Autumn 0971 | 92466 | 90 379 | 73 474 |
| **Great 3-seater Sofa Corner Left** | Cifrado 0111 | 92467 | 136 149 | 110 688 |
| **Great 3-seater Sofa Corner Left** | Cifrado 0381 | 20903 | 136 149 | 110 688 |
| **Great 3-seater Sofa Corner Left** | Cifrado 0741 | 20980 | 136 149 | 110 688 |
| **Great 3-seater Sofa Corner Left** | Cifrado 0901 | 92468 | 136 149 | 110 688 |
| **Great 3-seater Sofa Corner Left** | Safire 0003 | 92469 | 123 154 | 100 131 |
| **Great 3-seater Sofa Corner Left** | Safire 0007 | 20918 | 123 154 | 100 131 |
| **Great 3-seater Sofa Corner Left** | Safire 0012 | 92470 | 123 154 | 100 131 |
| **Great 3-seater Sofa Corner Left** | Safire 0013 | 92472 | 123 154 | 100 131 |
| **Great 3-seater Sofa Corner Left** | Safire 0014 | 92471 | 123 154 | 100 131 |

# Great — Price List

| Product name | Finish | SKU | Retail Price SEK | List Price SEK (ex VAT) |
|---|---|---|---|---|
| **Curated Collection** | | | | |
| **Great 3-seater Sofa Corner Right** | Autumn 0131 | 92483 | 90 379 | 73 474 |
| **Great 3-seater Sofa Corner Right** | Autumn 0221 | 92484 | 90 379 | 73 474 |
| **Great 3-seater Sofa Corner Right** | Autumn 0331 | 92485 | 90 379 | 73 474 |
| **Great 3-seater Sofa Corner Right** | Autumn 0361 | 20891 | 90 379 | 73 474 |
| **Great 3-seater Sofa Corner Right** | Autumn 0971 | 92486 | 90 379 | 73 474 |
| **Great 3-seater Sofa Corner Right** | Cifrado 0111 | 92487 | 136 149 | 110 688 |
| **Great 3-seater Sofa Corner Right** | Cifrado 0381 | 20904 | 136 149 | 110 688 |
| **Great 3-seater Sofa Corner Right** | Cifrado 0741 | 20981 | 136 149 | 110 688 |
| **Great 3-seater Sofa Corner Right** | Cifrado 0901 | 92488 | 136 149 | 110 688 |
| **Great 3-seater Sofa Corner Right** | Safire 0003 | 92489 | 123 154 | 100 131 |
| **Great 3-seater Sofa Corner Right** | Safire 0007 | 20919 | 114 989 | 93 484 |
| **Great 3-seater Sofa Corner Right** | Safire 0012 | 92490 | 123 154 | 100 131 |
| **Great 3-seater Sofa Corner Right** | Safire 0013 | 92492 | 123 154 | 100 131 |
| **Great 3-seater Sofa Corner Right** | Safire 0014 | 92491 | 123 154 | 100 131 |
| **Great 3-seater Sofa Narrow** | Autumn 0131 | 92503 | 68 069 | 55 338 |
| **Great 3-seater Sofa Narrow** | Autumn 0221 | 92504 | 68 069 | 55 338 |
| **Great 3-seater Sofa Narrow** | Autumn 0331 | 92505 | 68 069 | 55 338 |
| **Great 3-seater Sofa Narrow** | Autumn 0361 | 20883 | 68 069 | 55 338 |
| **Great 3-seater Sofa Narrow** | Autumn 0971 | 92506 | 68 069 | 55 338 |
| **Great 3-seater Sofa Narrow** | Cifrado 0111 | 92507 | 99 694 | 81 052 |
| **Great 3-seater Sofa Narrow** | Cifrado 0381 | 20905 | 99 694 | 81 052 |
| **Great 3-seater Sofa Narrow** | Cifrado 0741 | 20972 | 99 694 | 81 052 |
| **Great 3-seater Sofa Narrow** | Cifrado 0901 | 92508 | 99 694 | 81 052 |
| **Great 3-seater Sofa Narrow** | Safire 0003 | 92509 | 89 229 | 72 542 |
| **Great 3-seater Sofa Narrow** | Safire 0007 | 20920 | 89 229 | 72 542 |
| **Great 3-seater Sofa Narrow** | Safire 0012 | 92510 | 89 229 | 72 542 |
| **Great 3-seater Sofa Narrow** | Safire 0013 | 92512 | 89 229 | 72 542 |
| **Great 3-seater Sofa Narrow** | Safire 0014 | 92511 | 89 229 | 72 542 |
| **Great 3-seater Sofa Narrow Chaise Left** | Autumn 0131 | 92523 | 84 514 | 68 713 |
| **Great 3-seater Sofa Narrow Chaise Left** | Autumn 0221 | 92524 | 84 514 | 68 713 |
| **Great 3-seater Sofa Narrow Chaise Left** | Autumn 0331 | 92525 | 84 514 | 68 713 |
| **Great 3-seater Sofa Narrow Chaise Left** | Autumn 0361 | 20884 | 84 514 | 68 713 |
| **Great 3-seater Sofa Narrow Chaise Left** | Autumn 0971 | 92526 | 84 514 | 68 713 |
| **Great 3-seater Sofa Narrow Chaise Left** | Cifrado 0111 | 92527 | 129 019 | 104 892 |
| **Great 3-seater Sofa Narrow Chaise Left** | Cifrado 0381 | 20906 | 129 019 | 104 892 |
| **Great 3-seater Sofa Narrow Chaise Left** | Cifrado 0741 | 20974 | 129 019 | 104 892 |
| **Great 3-seater Sofa Narrow Chaise Left** | Cifrado 0901 | 92528 | 129 019 | 104 892 |
| **Great 3-seater Sofa Narrow Chaise Left** | Safire 0003 | 92529 | 113 839 | 92 552 |
| **Great 3-seater Sofa Narrow Chaise Left** | Safire 0007 | 20921 | 113 839 | 92 552 |
| **Great 3-seater Sofa Narrow Chaise Left** | Safire 0012 | 92530 | 113 839 | 92 552 |
| **Great 3-seater Sofa Narrow Chaise Left** | Safire 0013 | 92532 | 113 839 | 92 552 |
| **Great 3-seater Sofa Narrow Chaise Left** | Safire 0014 | 92531 | 113 839 | 92 552 |
| **Great 3-Seater Sofa Narrow Chaise Right** | Autumn 0131 | 92543 | 84 514 | 68 713 |
| **Great 3-Seater Sofa Narrow Chaise Right** | Autumn 0221 | 92544 | 84 514 | 68 713 |
| **Great 3-Seater Sofa Narrow Chaise Right** | Autumn 0331 | 92545 | 84 514 | 68 713 |
| **Great 3-Seater Sofa Narrow Chaise Right** | Autumn 0361 | 20885 | 84 514 | 68 713 |
| **Great 3-Seater Sofa Narrow Chaise Right** | Autumn 0971 | 92546 | 84 514 | 68 713 |
| **Great 3-Seater Sofa Narrow Chaise Right** | Cifrado 0111 | 92547 | 129 019 | 104 892 |
| **Great 3-Seater Sofa Narrow Chaise Right** | Cifrado 0381 | 20907 | 129 019 | 104 892 |
| **Great 3-Seater Sofa Narrow Chaise Right** | Cifrado 0741 | 20975 | 129 019 | 104 892 |
| **Great 3-Seater Sofa Narrow Chaise Right** | Cifrado 0901 | 92548 | 129 019 | 104 892 |
| **Great 3-Seater Sofa Narrow Chaise Right** | Safire 0003 | 92549 | 113 839 | 92 552 |
| **Great 3-Seater Sofa Narrow Chaise Right** | Safire 0007 | 20922 | 113 839 | 92 552 |
| **Great 3-Seater Sofa Narrow Chaise Right** | Safire 0012 | 92550 | 113 839 | 92 552 |
| **Great 3-Seater Sofa Narrow Chaise Right** | Safire 0013 | 92552 | 113 839 | 92 552 |
| **Great 3-Seater Sofa Narrow Chaise Right** | Safire 0014 | 92551 | 113 839 | 92 552 |
| **Great 3-seater Sofa Narrow Corner Left** | Autumn 0131 | 92563 | 83 364 | 67 770 |
| **Great 3-seater Sofa Narrow Corner Left** | Autumn 0221 | 92564 | 83 364 | 67 770 |
| **Great 3-seater Sofa Narrow Corner Left** | Autumn 0331 | 92565 | 83 364 | 67 770 |
| **Great 3-seater Sofa Narrow Corner Left** | Autumn 0361 | 20888 | 83 364 | 67 770 |
| **Great 3-seater Sofa Narrow Corner Left** | Autumn 0971 | 92566 | 83 364 | 67 770 |
| **Great 3-seater Sofa Narrow Corner Left** | Cifrado 0111 | 92567 | 125 569 | 102 086 |
| **Great 3-seater Sofa Narrow Corner Left** | Cifrado 0381 | 20908 | 125 569 | 102 086 |
| **Great 3-seater Sofa Narrow Corner Left** | Cifrado 0741 | 20978 | 125 569 | 102 086 |
| **Great 3-seater Sofa Narrow Corner Left** | Cifrado 0901 | 92568 | 125 569 | 102 086 |
| **Great 3-seater Sofa Narrow Corner Left** | Safire 0003 | 92569 | 105 559 | 85 825 |
| **Great 3-seater Sofa Narrow Corner Left** | Safire 0007 | 20923 | 105 559 | 85 825 |
| **Great 3-seater Sofa Narrow Corner Left** | Safire 0012 | 92570 | 105 559 | 85 825 |
| **Great 3-seater Sofa Narrow Corner Left** | Safire 0013 | 92572 | 105 559 | 85 825 |
| **Great 3-seater Sofa Narrow Corner Left** | Safire 0014 | 92571 | 105 559 | 85 825 |

# Great — Price List

| Product name | Finish | SKU | Retail Price SEK | List Price SEK (ex VAT) |
|---|---|---|---|---|
| **Curated Collection** | | | | |
| **Great 3-seater Sofa Narrow Corner Right** | Autumn 0131 | 92583 | 83 364 | 67 770 |
| **Great 3-seater Sofa Narrow Corner Right** | Autumn 0221 | 92584 | 83 364 | 67 770 |
| **Great 3-seater Sofa Narrow Corner Right** | Autumn 0331 | 92585 | 83 364 | 67 770 |
| **Great 3-seater Sofa Narrow Corner Right** | Autumn 0361 | 20889 | 83 364 | 67 770 |
| **Great 3-seater Sofa Narrow Corner Right** | Autumn 0971 | 92586 | 83 364 | 67 770 |
| **Great 3-seater Sofa Narrow Corner Right** | Cifrado 0111 | 92587 | 125 569 | 102 086 |
| **Great 3-seater Sofa Narrow Corner Right** | Cifrado 0381 | 20909 | 125 569 | 102 086 |
| **Great 3-seater Sofa Narrow Corner Right** | Cifrado 0741 | 20979 | 125 569 | 102 086 |
| **Great 3-seater Sofa Narrow Corner Right** | Cifrado 0901 | 92588 | 125 569 | 102 086 |
| **Great 3-seater Sofa Narrow Corner Right** | Safire 0003 | 92589 | 105 559 | 85 825 |
| **Great 3-seater Sofa Narrow Corner Right** | Safire 0007 | 20924 | 105 559 | 85 825 |
| **Great 3-seater Sofa Narrow Corner Right** | Safire 0012 | 92590 | 105 559 | 85 825 |
| **Great 3-seater Sofa Narrow Corner Right** | Safire 0013 | 92592 | 105 559 | 85 825 |
| **Great 3-seater Sofa Narrow Corner Right** | Safire 0014 | 92591 | 105 559 | 85 825 |
| **Graded-in Textile*** | | | | |
| **Great 2-seater Sofa** | Grade 2 | | 54 729 | 44 494 |
| **Great 2-seater Sofa** | Grade 5 | | 68 299 | 55 522 |
| **Great 2-seater Sofa** | Grade 6 | | 76 004 | 61 790 |
| **Great 3-Seater Sofa Narrow Chaise Right** | Grade 2 | | 93 484 | 76 004 |
| **Great 3-Seater Sofa Narrow Chaise Right** | Grade 5 | | 116 714 | 94 887 |
| **Great 3-Seater Sofa Narrow Chaise Right** | Grade 6 | | 129 824 | 105 547 |
| **Great 3-seater Sofa** | Grade 2 | | 77 269 | 62 825 |
| **Great 3-seater Sofa** | Grade 5 | | 96 474 | 78 430 |
| **Great 3-seater Sofa** | Grade 6 | | 107 399 | 87 320 |
| **Great 3-seater Sofa Chaise Left** | Grade 2 | | 96 474 | 78 430 |
| **Great 3-seater Sofa Chaise Left** | Grade 5 | | 120 624 | 98 072 |
| **Great 3-seater Sofa Chaise Left** | Grade 6 | | 134 309 | 109 193 |
| **Great 3-seater Sofa Chaise Right** | Grade 2 | | 96 474 | 78 430 |
| **Great 3-seater Sofa Chaise Right** | Grade 5 | | 120 624 | 98 072 |
| **Great 3-seater Sofa Chaise Right** | Grade 6 | | 134 309 | 109 193 |
| **Great 3-seater Sofa Corner Left** | Grade 2 | | 99 234 | 80 673 |
| **Great 3-seater Sofa Corner Left** | Grade 5 | | 123 844 | 100 683 |
| **Great 3-seater Sofa Corner Left** | Grade 6 | | 137 644 | 111 907 |
| **Great 3-seater Sofa Corner Right** | Grade 2 | | 99 234 | 80 673 |
| **Great 3-seater Sofa Corner Right** | Grade 5 | | 123 844 | 100 683 |
| **Great 3-seater Sofa Corner Right** | Grade 6 | | 137 644 | 111 907 |
| **Great 3-seater Sofa Narrow** | Grade 2 | | 76 464 | 62 169 |
| **Great 3-seater Sofa Narrow** | Grade 5 | | 94 404 | 76 751 |
| **Great 3-seater Sofa Narrow** | Grade 6 | | 104 524 | 84 974 |
| **Great 3-seater Sofa Narrow Chaise Left** | Grade 2 | | 93 484 | 76 004 |
| **Great 3-seater Sofa Narrow Chaise Left** | Grade 5 | | 116 714 | 94 887 |
| **Great 3-seater Sofa Narrow Chaise Left** | Grade 6 | | 129 824 | 105 547 |
| **Great 3-seater Sofa Narrow Corner Left** | Grade 2 | | 91 874 | 74 693 |
| **Great 3-seater Sofa Narrow Corner Left** | Grade 5 | | 113 724 | 92 460 |
| **Great 3-seater Sofa Narrow Corner Left** | Grade 6 | | 126 144 | 102 557 |
| **Great 3-seater Sofa Narrow Corner Right** | Grade 2 | | 91 874 | 74 693 |
| **Great 3-seater Sofa Narrow Corner Right** | Grade 5 | | 113 724 | 92 460 |
| **Great 3-seater Sofa Narrow Corner Right** | Grade 6 | | 126 144 | 102 557 |

*Please make sure to check pro.hem.com for the most up to date information on finishes and stock availability.

# Koti 2-Seater Sofa

*Design by Form Us With Love*

Sheer, unadulterated comfort lies at the heart of the Koti Sofa. From the super-soft cushions that you sink into, to the downy armrests that are as comfortable as pillows, to the chunky bouclé or subtle virgin wool upholsteries, design studio Form Us With Love was obsessed with making it a relaxed sofa for relaxed living. Taking its name from the Finnish word for "home," the Koti Sofa was always intended to be a sanctuary.

**Upholstery**
*Bute Storr*
by Bute Fabrics (Scotland)
97 % Pure New Wool, 3% Nylon
65000 Martindale
Lightfastness 5
Flame resistance IMO FTP Code(2010) Annex 1, Part 8, BS 5852: Part 1 & 2 (Crib 5), US Cal. TB 121

*Sera*
by Rohi (Germany)
94% Virgin Wool, 6% Polyamide
122,000 Martindale
Pilling 4-5; Lightfastness 5-8
Flame resistance EN 1021: Part 1 & 2, BS 5852: Part 1 & 2 (Crib 5), US Cal. TB 117-2013

*Autumn*
by Kvadrat (Denmark)
100% Recycled Polyester
50,000 Martindale
Pilling 4-5
Lightfastness 6-7
Flame resistance ASTM E 84 Adhered, ASTM E84 Class A Unadhered, EN 1021: Part 1 & 2, IMO 2010 FTP Code Part 8, US Cal. TB 117-2013

**Legs material**
*Steel*
Powder Coated

*Solid Oak*
Quercus Robur
Clear Lacquered

Wood is a natural material. The color might vary from piece to piece

**Inside material**
PU foam
Wooden structure

**Country of origin**
Lithuania

**3D model**
3D files of all products are available on the product pages on hem.com

**Eggshell**
*Bute Storr*

**Sawdust**
*Bute Storr*

**Pebble**
*Bute Storr*

**Sand**
*Sera*

**Pine**
*Sera (Hem exclusive)*

**Rosewood**
*Sera*

**0361**
*Autumn*

**0221**
*Autumn*

**Oak**
*Solid Oak*

**Samples**
We supply samples of our material finishes. You can order them directly from hem.com/samples

**Graded-in Textile and Made-To-Order**
Reach out to your local representative for the full selection of made-to-order options.

**Koti 2-Seater Sofa**

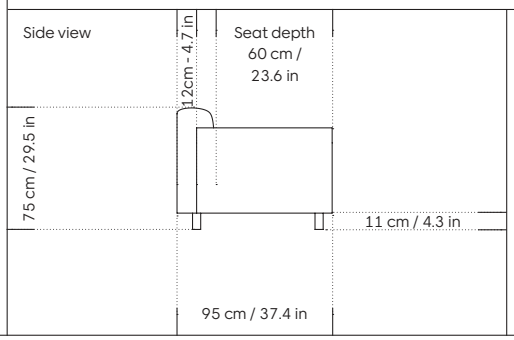


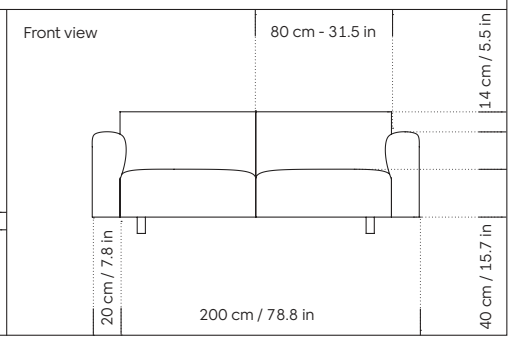

# Koti 3-Seater Sofa

*Design by Form Us With Love*

Sheer, unadulterated comfort lies at the heart of the Koti Sofa. From the super-soft cushions that you sink into, to the downy armrests that are as comfortable as pillows, to the chunky bouclé or subtle virgin wool upholsteries, design studio Form Us With Love was obsessed with making it a relaxed sofa for relaxed living. Taking its name from the Finnish word for "home," the Koti Sofa was always intended to be a sanctuary.

**Upholstery**
*Bute Storr*
by Bute Fabrics (Scotland)
97 % Pure New Wool, 3% Nylon
65000 Martindale
Lightfastness 5
Flame resistance IMO FTP Code(2010) Annex 1, Part 8, BS 5852: Part 1 & 2 (Crib 5), US Cal. TB 121

*Sera*
by Rohi (Germany)
94% Virgin Wool, 6% Polyamide
122,000 Martindale
Pilling 4-5; Lightfastness 5-8
Flame resistance EN 1021: Part 1 & 2, BS 5852: Part 1 & 2 (Crib 5), US Cal. TB 117-2013

*Autumn*
by Kvadrat (Denmark)
100% Recycled Polyester
50,000 Martindale
Pilling 4-5
Lightfastness 6-7
Flame resistance ASTM E 84 Adhered, ASTM E84 Class A Unadhered, EN 1021: Part 1 & 2, IMO 2010 FTP Code Part 8, US Cal. TB 117-2013

**Legs material**
*Steel*
Powder Coated

*Solid Oak*
Quercus Robur
Clear Lacquered

Wood is a natural material. The color might vary from piece to piece

**Inside material**
PU foam
Wooden structure

**Country of origin**
Lithuania

**3D model**
3D files of all products are available on the product pages on hem.com

**Eggshell**
*Bute Storr*

**Sawdust**
*Bute Storr*

**Pebble**
*Bute Storr*

**Sand**
*Sera*

**Pine**
*Sera (Hem exclusive)*

**Rosewood**
*Sera*

**0361**
*Autumn*

**0221**
*Autumn*

**Oak**
*Solid Oak*

**Samples**
We supply samples of our material finishes. You can order them directly from hem.com/samples

**Graded-in Textile and Made-To-Order**
Reach out to your local representative for the full selection of made-to-order options.

**Koti 3-Seater Sofa**

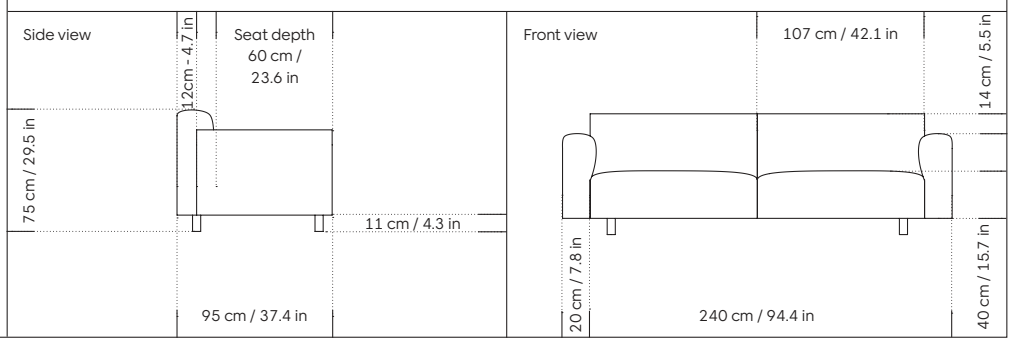

# Koti Sofas — Price List

| Product name | Finish | SKU | Retail Price SEK | List Price SEK (ex VAT) |
|---|---|---|---|---|
| **Curated Collection** | | | | |
| **Koti 2-seater Sofa** | Autumn 221 | 92793 | 34 489 | 28 037 |
| **Koti 2-seater Sofa** | Autumn 361 | 92792 | 34 489 | 28 037 |
| **Koti 2-seater Sofa** | Eggshell | 30521 | 48 404 | 39 353 |
| **Koti 2-seater Sofa** | Pine | 30601 | 42 309 | 34 397 |
| **Koti 2-seater Sofa** | Sand | 30602 | 42 309 | 34 397 |
| **Koti 2-seater Sofa** | Sawdust | 30522 | 48 404 | 39 353 |
| **Koti 2-seater Sofa** | Sera Rosewood | 92790 | 42 309 | 34 397 |
| **Koti 2-seater Sofa** | Storr 612 | 92815 | 48 404 | 39 353 |
| **Koti 3-seater Sofa** | Autumn 221 | 92851 | 43 689 | 35 524 |
| **Koti 3-seater Sofa** | Autumn 361 | 92850 | 43 689 | 35 524 |
| **Koti 3-seater Sofa** | Eggshell | 30523 | 54 499 | 44 310 |
| **Koti 3-seater Sofa** | Pine | 30591 | 48 404 | 39 353 |
| **Koti 3-seater Sofa** | Sand | 30603 | 48 404 | 39 353 |
| **Koti 3-seater Sofa** | Sawdust | 30524 | 54 499 | 44 310 |
| **Koti 3-seater Sofa** | Sera Rosewood | 92848 | 48 404 | 39 353 |
| **Koti 3-seater Sofa** | Storr 612 | 92873 | 54 499 | 44 310 |
| **Graded-in Textile*** | | | | |
| **Koti 2-seater Sofa** | Grade 1 | | 38 169 | 31 027 |
| **Koti 2-seater Sofa** | Grade 2 | | 41 159 | 33 465 |
| **Koti 2-seater Sofa** | Grade 3 | | 43 114 | 35 052 |
| **Koti 2-seater Sofa** | Grade 4 | | 45 184 | 36 731 |
| **Koti 2-seater Sofa** | Grade 5 | | 48 174 | 39 169 |
| **Koti 2-seater Sofa** | Grade 6 | | 52 084 | 42 343 |
| **Koti 3-seater Sofa** | Grade 1 | | 44 494 | 36 179 |
| **Koti 3-seater Sofa** | Grade 2 | | 47 484 | 38 606 |
| **Koti 3-seater Sofa** | Grade 3 | | 49 669 | 40 377 |
| **Koti 3-seater Sofa** | Grade 4 | | 51 854 | 42 159 |
| **Koti 3-seater Sofa** | Grade 5 | | 54 844 | 44 586 |
| **Koti 3-seater Sofa** | Grade 6 | | 58 869 | 47 863 |



*Please make sure to check pro.hem.com for the most up to date information on finishes and stock availability.

# Kumo Sofa with Armrests

*Design by Anderssen & Voll*

The Kumo Sofa system is built around an innovative metal frame onto which individual cushion components are added. This intelligent design from Anderssen & Voll makes it especially convenient to live with—readily reconfigurable whenever and however you wish. The Kumo Sofa is also efficient and responsible to ship thanks to the same quality: it dismantles easily. Like its namesake—Kumo means "cloud" in Japanese—this sofa is light and soft as well as clever, with generous, foam-filled cushions covered in a luxurious, highly textured woolen fabric as a final flourish.

**Upholstery**
*Sera*
by Rohi (Germany)
94% Virgin Wool, 6% Polyamide
>122,000 Martindale
Pilling 4-5
Lightfastness 5-8
Flame resistance EN 1021: Part 1 & 2, BS 5852: Part 1 & 2 (Crib 5), US Cal. TB 117

**Leg material**
*Steel*
Powder Coated

**Inside material**
PU foam
Steel structure

**Country of origin**
Lithuania

**Tests & certifications**
EN 16139:2013 – L2: Extreme use – Furniture – Strength, durability and safety – Requirements for non-domestic seating

**3D model**
3D files of all products are available on the product pages on hem.com

**Canyon**
*Sera (Hem exclusive)*

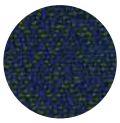

**Mare**
*Sera (Mare)*

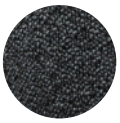

**Graphite**
*Sera (Graphit)*

**Porcelain**
*Sera (Porcelain)*

**Pine**
*Sera (Pine)*

**Rosewood**
*Sera*

**Black (RAL 9005)**
*Powder Coated Steel*

**Samples**
We supply samples of our material finishes. You can order them directly from hem.com/samples

**Graded-in Textile and Made-To-Order**
Reach out to your local representative for the full selection of made-to-order options.

**Kumo Sofa with Armrests**

Side view

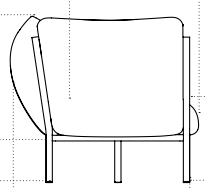

**Modularity**
This is a modular product that can be configured freely to fit your needs. Reach out to info@hem.com for assistance

**Kumo 2-seater Sofa with Armrests**

Front view

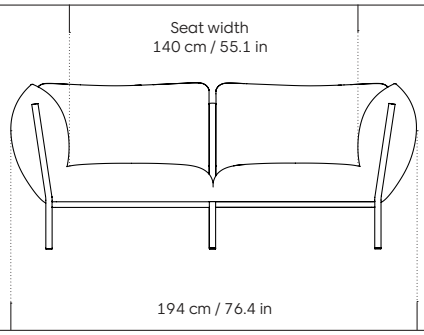


**Kumo 3-seater Sofa with Armrests**

Front view

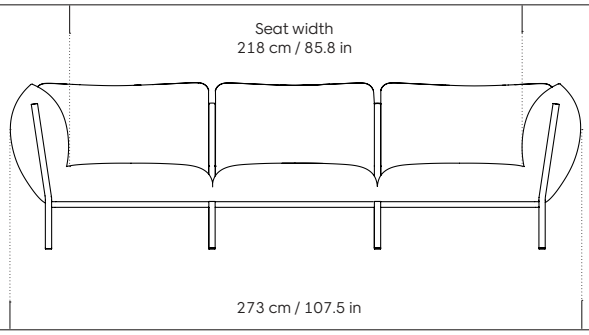


**Kumo 4-seater Sofa with Armrests**

Front view

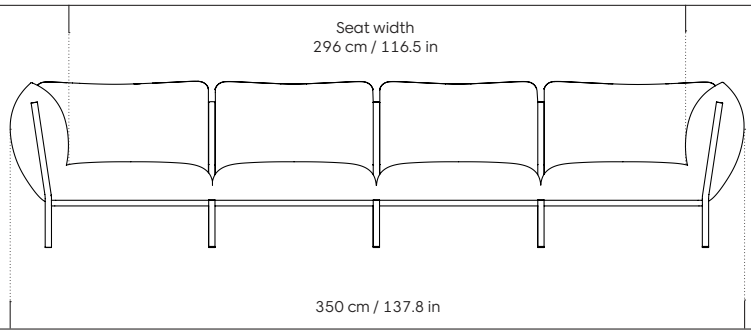

# Kumo Sofa

*Design by Anderssen & Voll*

The Kumo Sofa system is built around an innovative metal frame onto which individual cushion components are added. This intelligent design from Anderssen & Voll makes it especially convenient to live with—readily reconfigurable whenever and however you wish. The Kumo Sofa is also efficient and responsible to ship thanks to the same quality: it dismantles easily. Like its namesake—Kumo means "cloud" in Japanese—this sofa is light and soft as well as clever, with generous, foam-filled cushions covered in a luxurious, highly textured woolen fabric as a final flourish.

**Upholstery**
*Sera*
by Rohi (Germany)
94% Virgin Wool, 6% Polyamide
>122,000 Martindale
Pilling 4-5
Lightfastness 5-8
Flame resistance EN 1021: Part 1 & 2, BS 5852: Part 1 & 2 (Crib 5), US Cal. TB 117

**Leg material**
*Steel*
Powder Coated

**Inside material**
PU foam
Steel structure

**Country of origin**
Lithuania

**Tests & certifications**
EN 16139:2013 – L2: Extreme use – Furniture – Strength, durability and safety – Requirements for non-domestic seating

**3D model**
3D files of all products are available on the product pages on hem.com

**Canyon**
*Sera (Hem exclusive)*

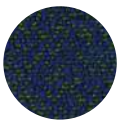

**Mare**
*Sera (Mare)*

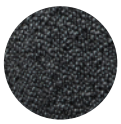

**Graphite**
*Sera (Graphit)*

**Porcelain**
*Sera (Porcelain)*

**Pine**
*Sera (Pine)*

**Rosewood**
*Sera*

**Black (RAL 9005)**
*Powder Coated Steel*

**Samples**
We supply samples of our material finishes. You can order them directly from hem.com/samples

**Graded-in Textile and Made-To-Order**
Reach out to your local representative for the full selection of made-to-order options.

**Kumo Sofa**

Side view

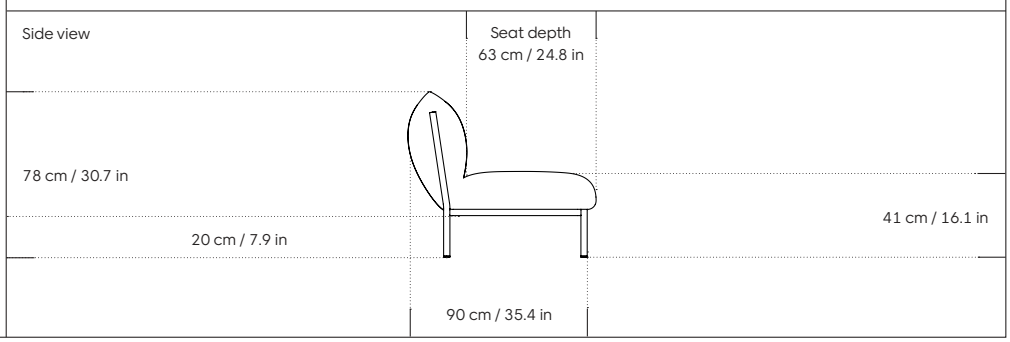

**Modularity**
This is a modular product that can be configured freely to fit your needs. Reach out to info@hem.com for assistance

**Kumo Single-seater**

Front view

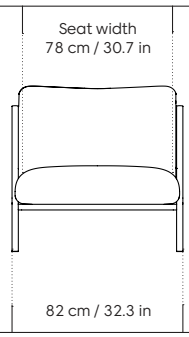


**Kumo 2-seater Sofa**

Front view

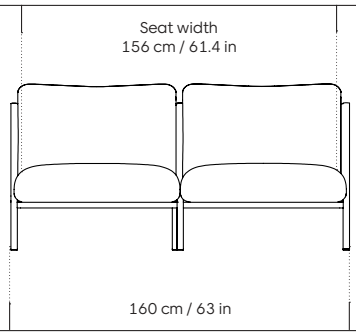


**Kumo 3-seater Sofa**

Front view

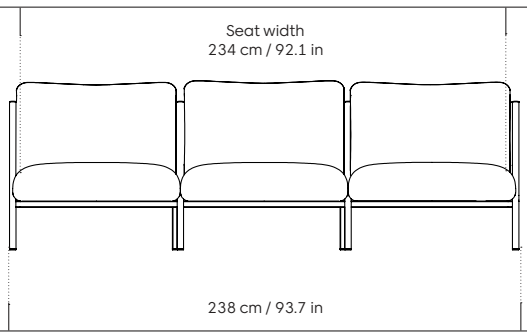


**Kumo 4-seater Sofa**

Front view

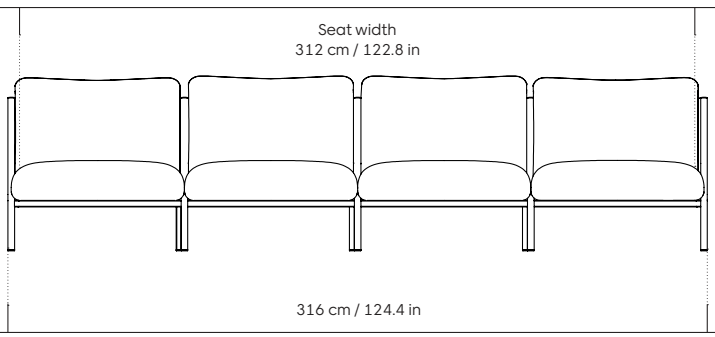

# Kumo Corner Sofa with Armrest

*Design by Anderssen & Voll*

The Kumo Sofa system is built around an innovative metal frame onto which individual cushion components are added. This intelligent design from Anderssen & Voll makes it especially convenient to live with—readily reconfigurable whenever and however you wish. The Kumo Sofa is also efficient and responsible to ship thanks to the same quality: it dismantles easily. Like its namesake—Kumo means "cloud" in Japanese—this sofa is light and soft as well as clever, with generous, foam-filled cushions covered in a luxurious, highly textured woolen fabric as a final flourish.

**Upholstery**
*Sera*
by Rohi (Germany)
94% Virgin Wool, 6% Polyamide
>122,000 Martindale
Pilling 4-5
Lightfastness 5-8
Flame resistance EN 1021: Part 1 & 2, BS 5852: Part 1 & 2 (Crib 5), US Cal. TB 117

**Leg material**
*Steel*
Powder Coated

**Inside material**
PU foam
Steel structure

**Country of origin**
Lithuania

**Tests & certifications**
EN 16139:2013 – L2: Extreme use – Furniture – Strength, durability and safety – Requirements for non-domestic seating

**3D model**
3D files of all products are available on the product pages on hem.com

**Canyon**
*Sera (Hem exclusive)*

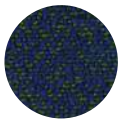

**Mare**
*Sera (Mare)*

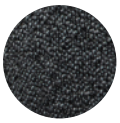

**Graphite**
*Sera (Graphit)*

**Porcelain**
*Sera (Porcelain)*

**Pine**
*Sera (Pine)*

**Rosewood**
*Sera*

**Black (RAL 9005)**
*Powder Coated Steel*

**Samples**
We supply samples of our material finishes. You can order them directly from hem.com/samples

**Graded-in Textile and Made-To-Order**
Reach out to your local representative for the full selection of made-to-order options.

**Kumo Corner Sofa Left with Armrest**

Side view

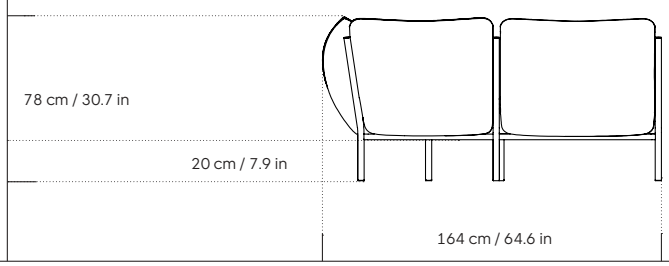

**Modularity**
This is a modular product that can be configured freely to fit your needs. Reach out to info@hem.com for assistance

**Kumo Corner Sofa Left with Armrest**

Front view

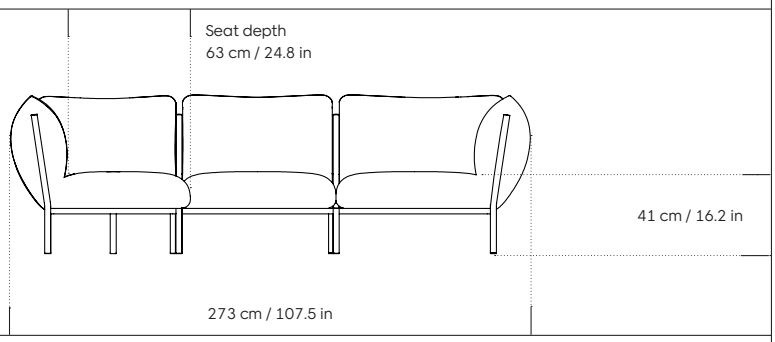


**Kumo Corner Sofa Left with Armrest**

Top view

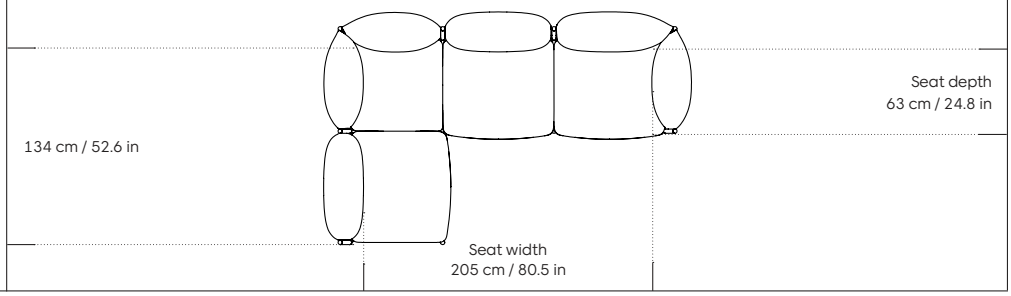

# Kumo Corner Sofa

*Design by Anderssen & Voll*

The Kumo Sofa system is built around an innovative metal frame onto which individual cushion components are added. This intelligent design from Anderssen & Voll makes it especially convenient to live with—readily reconfigurable whenever and however you wish. The Kumo Sofa is also efficient and responsible to ship thanks to the same quality: it dismantles easily. Like its namesake—Kumo means "cloud" in Japanese—this sofa is light and soft as well as clever, with generous, foam-filled cushions covered in a luxurious, highly textured woolen fabric as a final flourish.

**Upholstery**
*Sera*
by Rohi (Germany)
94% Virgin Wool, 6% Polyamide
>122,000 Martindale
Pilling 4-5
Lightfastness 5-8
Flame resistance EN 1021: Part 1 & 2, BS 5852: Part 1 & 2 (Crib 5), US Cal. TB 117

**Leg material**
*Steel*
Powder Coated

**Inside material**
PU foam
Steel structure

**Country of origin**
Lithuania

**Tests & certifications**
EN 16139:2013 – L2: Extreme use – Furniture – Strength, durability and safety – Requirements for non-domestic seating

**3D model**
3D files of all products are available on the product pages on hem.com

**Canyon**
*Sera (Hem exclusive)*

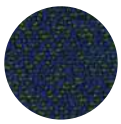

**Mare**
*Sera (Mare)*

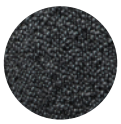

**Graphite**
*Sera (Graphit)*

**Porcelain**
*Sera (Porcelain)*

**Pine**
*Sera (Pine)*

**Rosewood**
*Sera*

**Black (RAL 9005)**
*Powder Coated Steel*

**Samples**
We supply samples of our material finishes. You can order them directly from hem.com/samples

**Graded-in Textile and Made-To-Order**
Reach out to your local representative for the full selection of made-to-order options.

**Kumo Corner Sofa Left**

Side view

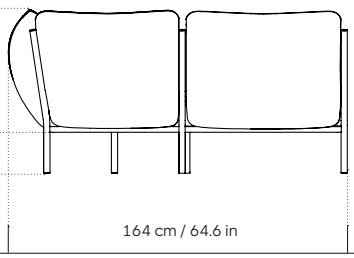

**Modularity**
This is a modular product that can be configured freely to fit your needs. Reach out to info@hem.com for assistance

**Kumo Corner Sofa Left**

Front view

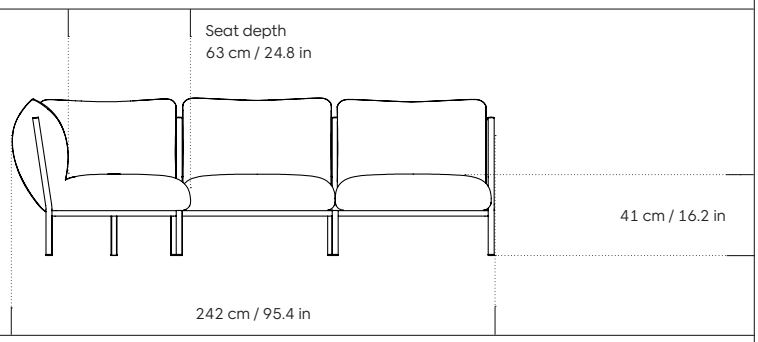


**Kumo Corner Sofa Left**

Top view

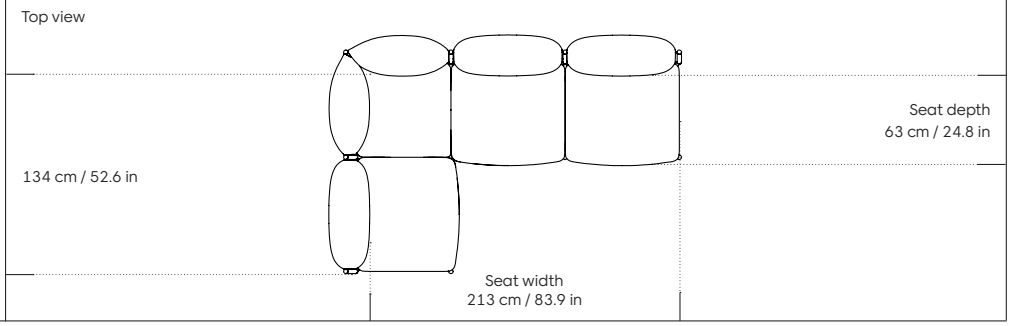

# Kumo Sofas — Price List

| Product name | Finish | SKU | Retail Price SEK | List Price SEK (ex VAT) |
|---|---|---|---|---|
| **Curated Collection** | | | | |
| **Kumo 2-seater Sofa** | Canyon | 30411 | 42 309 | 34 397 |
| **Kumo 2-seater Sofa** | Graphite | 30409 | 42 309 | 34 397 |
| **Kumo 2-seater Sofa** | Mare | 30410 | 42 309 | 34 397 |
| **Kumo 2-seater Sofa** | Pine | 30685 | 42 309 | 34 397 |
| **Kumo 2-seater Sofa** | Porcelain | 30408 | 42 309 | 34 397 |
| **Kumo 2-seater Sofa** | Sera Rosewood | 95382 | 42 309 | 34 397 |
| **Kumo 2-seater Sofa with Armrests** | Canyon | 30170 | 46 909 | 38 134 |
| **Kumo 2-seater Sofa with Armrests** | Graphite | 30079 | 46 909 | 38 134 |
| **Kumo 2-seater Sofa with Armrests** | Mare | 30092 | 46 909 | 38 134 |
| **Kumo 2-seater Sofa with Armrests** | Pine | 30686 | 46 909 | 38 134 |
| **Kumo 2-seater Sofa with Armrests** | Porcelain | 30073 | 46 909 | 38 134 |
| **Kumo 2-seater Sofa with Armrests** | Sera Rosewood | 95414 | 46 909 | 38 134 |
| **Kumo 3-seater Sofa** | Canyon | 30415 | 57 029 | 46 368 |
| **Kumo 3-seater Sofa** | Graphite | 30413 | 57 029 | 46 368 |
| **Kumo 3-seater Sofa** | Mare | 30414 | 57 029 | 46 368 |
| **Kumo 3-seater Sofa** | Pine | 30687 | 57 029 | 46 368 |
| **Kumo 3-seater Sofa** | Porcelain | 30412 | 57 029 | 46 368 |
| **Kumo 3-seater Sofa** | Sera Rosewood | 95446 | 57 029 | 46 368 |
| **Kumo 3-seater Sofa with Armrests** | Canyon | 30184 | 61 974 | 50 382 |
| **Kumo 3-seater Sofa with Armrests** | Graphite | 30080 | 61 974 | 50 382 |
| **Kumo 3-seater Sofa with Armrests** | Mare | 30093 | 61 974 | 50 382 |
| **Kumo 3-seater Sofa with Armrests** | Pine | 30688 | 61 974 | 50 382 |
| **Kumo 3-seater Sofa with Armrests** | Porcelain | 30074 | 61 974 | 50 382 |
| **Kumo 3-seater Sofa with Armrests** | Sera Rosewood | 95478 | 61 974 | 50 382 |
| **Kumo 4-seater Sofa** | Canyon | 30419 | 70 369 | 57 213 |
| **Kumo 4-seater Sofa** | Graphite | 30417 | 70 369 | 57 213 |
| **Kumo 4-seater Sofa** | Mare | 30418 | 70 369 | 57 213 |
| **Kumo 4-seater Sofa** | Pine | 30689 | 70 369 | 57 213 |
| **Kumo 4-seater Sofa** | Porcelain | 30416 | 70 369 | 57 213 |
| **Kumo 4-seater Sofa** | Sera Rosewood | 95510 | 70 369 | 57 213 |
| **Kumo 4-seater Sofa with Armrests** | Canyon | 30185 | 76 234 | 61 974 |
| **Kumo 4-seater Sofa with Armrests** | Graphite | 30100 | 76 234 | 61 974 |
| **Kumo 4-seater Sofa with Armrests** | Mare | 30101 | 76 234 | 61 974 |
| **Kumo 4-seater Sofa with Armrests** | Pine | 30690 | 76 234 | 61 974 |
| **Kumo 4-seater Sofa with Armrests** | Porcelain | 30099 | 76 234 | 61 974 |
| **Kumo 4-seater Sofa with Armrests** | Sera Rosewood | 95542 | 76 234 | 61 974 |
| **Kumo Corner Sofa Left** | Canyon | 30449 | 75 084 | 61 042 |
| **Kumo Corner Sofa Left** | Graphite | 30448 | 75 084 | 61 042 |
| **Kumo Corner Sofa Left** | Mare | 30447 | 75 084 | 61 042 |
| **Kumo Corner Sofa Left** | Pine | 30691 | 75 084 | 61 042 |
| **Kumo Corner Sofa Left** | Porcelain | 30446 | 75 084 | 61 042 |
| **Kumo Corner Sofa Left** | Sera Rosewood | 95574 | 75 084 | 61 042 |
| **Kumo Corner Sofa Left with Armrest** | Canyon | 30441 | 77 499 | 63 009 |
| **Kumo Corner Sofa Left with Armrest** | Graphite | 30440 | 77 499 | 63 009 |
| **Kumo Corner Sofa Left with Armrest** | Mare | 30439 | 77 499 | 63 009 |
| **Kumo Corner Sofa Left with Armrest** | Pine | 30692 | 77 499 | 63 009 |
| **Kumo Corner Sofa Left with Armrest** | Porcelain | 30438 | 77 499 | 63 009 |
| **Kumo Corner Sofa Left with Armrest** | Sera Rosewood | 95606 | 77 499 | 63 009 |
| **Kumo Corner Sofa Right** | Canyon | 30453 | 75 084 | 61 042 |
| **Kumo Corner Sofa Right** | Graphite | 30452 | 75 084 | 61 042 |
| **Kumo Corner Sofa Right** | Mare | 30451 | 75 084 | 61 042 |
| **Kumo Corner Sofa Right** | Pine | 30693 | 75 084 | 61 042 |
| **Kumo Corner Sofa Right** | Porcelain | 30450 | 75 084 | 61 042 |
| **Kumo Corner Sofa Right** | Sera Rosewood | 95638 | 75 084 | 61 042 |
| **Kumo Corner Sofa Right with Armrest** | Canyon | 30445 | 77 499 | 63 009 |
| **Kumo Corner Sofa Right with Armrest** | Graphite | 30444 | 77 499 | 63 009 |
| **Kumo Corner Sofa Right with Armrest** | Mare | 30443 | 77 499 | 63 009 |
| **Kumo Corner Sofa Right with Armrest** | Pine | 30694 | 77 499 | 63 009 |
| **Kumo Corner Sofa Right with Armrest** | Porcelain | 30442 | 77 499 | 63 009 |
| **Kumo Corner Sofa Right with Armrest** | Sera Rosewood | 95670 | 77 499 | 63 009 |

# Kumo Sofas — Price List

| Product name | Finish | SKU | Retail Price SEK | List Price SEK (ex VAT) |
|---|---|---|---|---|
| **Curated Collection** | | | | |
| **Kumo Single-seater** | Canyon | 30183 | 21 149 | 17 193 |
| **Kumo Single-seater** | Graphite | 30078 | 21 149 | 17 193 |
| **Kumo Single-seater** | Mare | 30091 | 21 149 | 17 193 |
| **Kumo Single-seater** | Pine | 30696 | 21 149 | 17 193 |
| **Kumo Single-seater** | Porcelain | 30072 | 21 149 | 17 193 |
| **Kumo Single-seater** | Sera Rosewood | 31869 | 21 149 | 17 193 |
| **Graded-in Textile*** | | | | |
| **Kumo 2-seater Sofa** | Grade 1 | | 39 894 | 32 430 |
| **Kumo 2-seater Sofa** | Grade 2 | | 41 734 | 33 925 |
| **Kumo 2-seater Sofa** | Grade 3 | | 42 999 | 34 960 |
| **Kumo 2-seater Sofa** | Grade 4 | | 44 264 | 35 984 |
| **Kumo 2-seater Sofa** | Grade 5 | | 46 104 | 37 479 |
| **Kumo 2-seater Sofa** | Grade 6 | | 48 519 | 39 445 |
| **Kumo 2-seater Sofa with Armrests** | Grade 1 | | 42 884 | 34 868 |
| **Kumo 2-seater Sofa with Armrests** | Grade 2 | | 45 874 | 37 295 |
| **Kumo 2-seater Sofa with Armrests** | Grade 3 | | 47 829 | 38 882 |
| **Kumo 2-seater Sofa with Armrests** | Grade 4 | | 49 899 | 40 572 |
| **Kumo 2-seater Sofa with Armrests** | Grade 5 | | 52 889 | 42 999 |
| **Kumo 2-seater Sofa with Armrests** | Grade 6 | | 56 799 | 46 173 |
| **Kumo 3-seater Sofa** | Grade 1 | | 53 119 | 43 183 |
| **Kumo 3-seater Sofa** | Grade 2 | | 56 109 | 45 621 |
| **Kumo 3-seater Sofa** | Grade 3 | | 58 064 | 47 208 |
| **Kumo 3-seater Sofa** | Grade 4 | | 60 134 | 48 887 |
| **Kumo 3-seater Sofa** | Grade 5 | | 63 124 | 51 325 |
| **Kumo 3-seater Sofa** | Grade 6 | | 67 034 | 54 499 |
| **Kumo 3-seater Sofa with Armrests** | Grade 1 | | 56 914 | 46 276 |
| **Kumo 3-seater Sofa with Armrests** | Grade 2 | | 60 594 | 49 266 |
| **Kumo 3-seater Sofa with Armrests** | Grade 3 | | 63 124 | 51 325 |
| **Kumo 3-seater Sofa with Armrests** | Grade 4 | | 65 654 | 53 372 |
| **Kumo 3-seater Sofa with Armrests** | Grade 5 | | 69 334 | 56 373 |
| **Kumo 3-seater Sofa with Armrests** | Grade 6 | | 74 279 | 60 387 |
| **Kumo 4-seater Sofa** | Grade 1 | | 65 424 | 53 188 |
| **Kumo 4-seater Sofa** | Grade 2 | | 69 104 | 56 178 |
| **Kumo 4-seater Sofa** | Grade 3 | | 71 634 | 58 236 |
| **Kumo 4-seater Sofa** | Grade 4 | | 74 279 | 60 387 |
| **Kumo 4-seater Sofa** | Grade 5 | | 77 844 | 63 285 |
| **Kumo 4-seater Sofa** | Grade 6 | | 82 904 | 67 402 |
| **Kumo 4-seater Sofa with Armrests** | Grade 1 | | 70 254 | 57 121 |
| **Kumo 4-seater Sofa with Armrests** | Grade 2 | | 74 739 | 60 766 |
| **Kumo 4-seater Sofa with Armrests** | Grade 3 | | 77 729 | 63 193 |
| **Kumo 4-seater Sofa with Armrests** | Grade 4 | | 80 834 | 65 723 |
| **Kumo 4-seater Sofa with Armrests** | Grade 5 | | 85 204 | 69 276 |
| **Kumo 4-seater Sofa with Armrests** | Grade 6 | | 91 184 | 74 129 |
| **Kumo Corner Sofa Left** | Grade 1 | | 69 679 | 56 649 |
| **Kumo Corner Sofa Left** | Grade 2 | | 73 704 | 59 927 |
| **Kumo Corner Sofa Left** | Grade 3 | | 76 579 | 62 261 |
| **Kumo Corner Sofa Left** | Grade 4 | | 79 339 | 64 504 |
| **Kumo Corner Sofa Left** | Grade 5 | | 83 364 | 67 770 |
| **Kumo Corner Sofa Left** | Grade 6 | | 88 884 | 72 266 |
| **Kumo Corner Sofa Left with Armrest** | Grade 1 | | 71 404 | 58 052 |
| **Kumo Corner Sofa Left with Armrest** | Grade 2 | | 75 889 | 61 698 |
| **Kumo Corner Sofa Left with Armrest** | Grade 3 | | 78 879 | 64 124 |
| **Kumo Corner Sofa Left with Armrest** | Grade 4 | | 81 984 | 66 654 |
| **Kumo Corner Sofa Left with Armrest** | Grade 5 | | 86 354 | 70 208 |
| **Kumo Corner Sofa Left with Armrest** | Grade 6 | | 92 334 | 75 072 |



*Please make sure to check pro.hem.com for the most up to date information on finishes and stock availability.

# Kumo Sofas — Price List

| Product name | Finish | SKU | Retail Price SEK | List Price SEK (ex VAT) |
|---|---|---|---|---|
| **Graded-in Textile*** | | | | |
| **Kumo Corner Sofa Right** | Grade 1 | | 69 679 | 56 649 |
| **Kumo Corner Sofa Right** | Grade 2 | | 73 704 | 59 927 |
| **Kumo Corner Sofa Right** | Grade 3 | | 76 579 | 62 261 |
| **Kumo Corner Sofa Right** | Grade 4 | | 79 339 | 64 504 |
| **Kumo Corner Sofa Right** | Grade 5 | | 83 364 | 67 770 |
| **Kumo Corner Sofa Right** | Grade 6 | | 88 884 | 72 266 |
| **Kumo Corner Sofa Right with Armrest** | Grade 1 | | 71 404 | 58 052 |
| **Kumo Corner Sofa Right with Armrest** | Grade 2 | | 75 889 | 61 698 |
| **Kumo Corner Sofa Right with Armrest** | Grade 3 | | 78 879 | 64 124 |
| **Kumo Corner Sofa Right with Armrest** | Grade 4 | | 81 984 | 66 654 |
| **Kumo Corner Sofa Right with Armrest** | Grade 5 | | 86 354 | 70 208 |
| **Kumo Corner Sofa Right with Armrest** | Grade 6 | | 92 334 | 75 072 |
| **Kumo Single-seater** | Grade 1 | | 18 619 | 15 134 |
| **Kumo Single-seater** | Grade 2 | | 20 459 | 16 629 |
| **Kumo Single-seater** | Grade 3 | | 21 724 | 17 664 |
| **Kumo Single-seater** | Grade 4 | | 22 989 | 18 688 |
| **Kumo Single-seater** | Grade 5 | | 24 829 | 20 183 |
| **Kumo Single-seater** | Grade 6 | | 27 244 | 22 149 |

*Please make sure to check pro.hem.com for the most up to date information on finishes and stock availability.

# Palma Pouf Small

*Design by Kusheda Mensah*

A Palma Pouf upgrades any space. Graphic, arresting, refreshingly carefree, these elegant upholstered seats bring visual interest and facilitate interaction wherever they are used. Casual and unorthodox seating encourages constructive and thoughtful communication, observes designer Kusheda Mensah. Her Palma Poufs series for Hem consists of three decorative shapes made from a solid base and a soft but sturdy upper. Use them as focal points, disrupt a traditional seating arrangement or playfully juxtapose shape and texture with a single pouf. Encourage perching, parking, lounging. Palma Poufs are available in a wide range of finishes for supreme mix or match options.

| Product name | Finish | SKU | Product name | Finish | SKU |
|---|---|---|---|---|---|
| **Palma Pouf Small** | Elmosoft 03009* | 92731 | **Palma Pouf Small** | Steelcut 3 0190* | 92716 |
| | Elmosoft 54035* | 92729 | | Steelcut 3 0240* | 92715 |
| | Elmosoft 98015* | 92732 | | Steelcut 3 0265* | 95926 |
| | Elmosoft 99999* | 92730 | | Steelcut 3 0655* | 95933 |
| | Gentle 0193* | 92723 | | Steelcut 3 0682* | 92717 |
| | Gentle 0373* | 92722 | | Steelcut 3 0975 | 31576 |
| | Gentle 0443* | 92721 | | Storr 0612 | 31575 |
| | Gentle 0553* | 92718 | | Storr 1501* | 95935 |
| | Gentle 0733* | 92720 | | Storr 3405* | 95936 |
| | Gentle 0753* | 92719 | | | |
| | Loop Loop 002* | 92726 | | | |
| | Loop Loop 003* | 92724 | | | |
| | Loop Loop 004* | 92728 | | | |
| | Loop Loop 005* | 92725 | | | |
| | Loop Loop 006* | 92727 | | | |

**Upholstery**

*Elmosoft Leather*
by Elmo (Sweden)
Scandinavian Grain Leather, Semi-aniline
Lightfastness 6

*Gentle 2*
by Kvadrat (Netherlands)
60% New wool, 20% Nylon, 20% Polyester
90,000 Martindale
Pilling 4-5
Lightfastness 6-7
Flame resistance EN 1021: Part 1 & 2, BS 5852: Part 1, US Cal. TB 117

*Loop Loop*
by Dedar (Italy)
28% Polyester, 25% Acrylic, 24% Wool, 23% Recycled Cotton
52,000 Martindale
Pilling 4-5
Lightfastness 4-5
Flame resistance US Cal. TB 117-2013, UK BS5852 CIGAR. TEST

*Steelcut 3*
by Kvadrat (Netherlands)
90% New Wool, worsted 10% Nylon
100,000 Martindale
Pilling 3-4
Lightfastness 6
Flame resistance EN 1021: Part 1 & 2, US Cal. TB 117-2013, BS 5852: Part 1, UNI 9175 1IM

*Bute Storr*
by Bute Fabrics (Scotland)
97 % Pure New Wool, 3% Nylon
65,000 Martindale
Lightfastness 5
Flame resistance IMO FTP Code(2010) Annex 1, Part 8, BS 5852: Part 1 & 2 (Crib 5), US Cal. TB 121

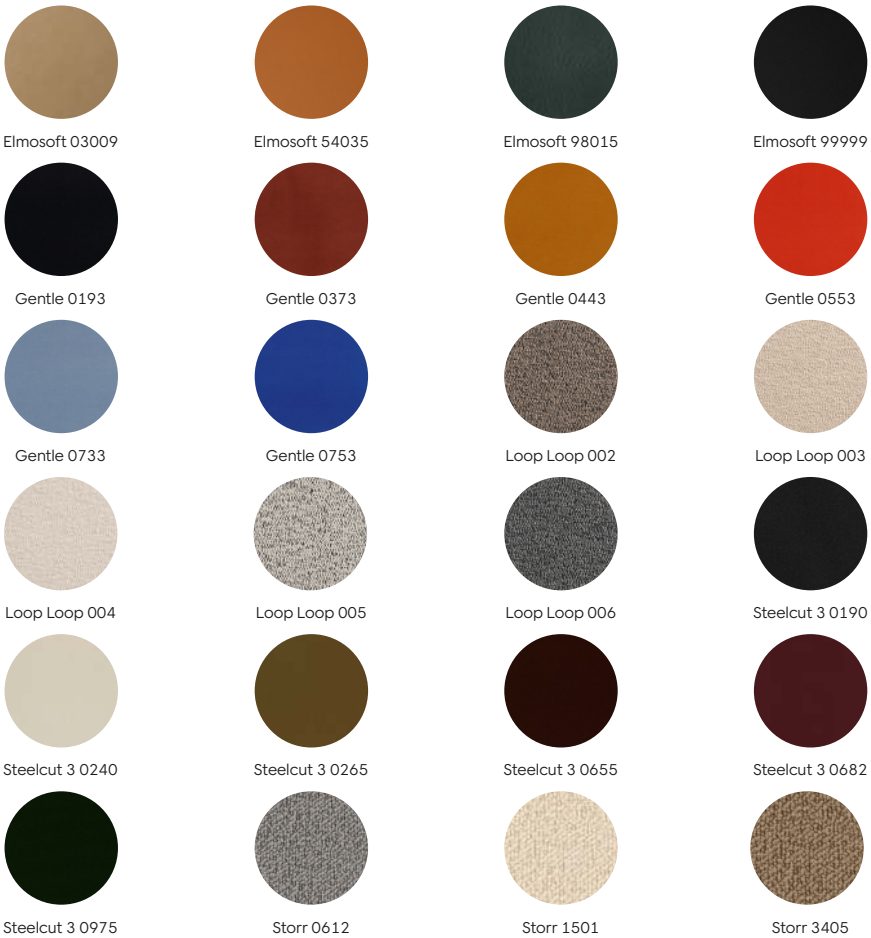


**Samples**
We supply samples of our material finishes. You can order them directly from hem.com/samples

***MTO**
Reach out to your local representative for the full selection of made-to-order options.

**Inside material**
PU Foam
Plywood Structure

**Country of origin**
Poland / Lithuania

**3D model**
3D files of all products are available on the product pages on hem.com

**Palma Pouf Small**

Top view

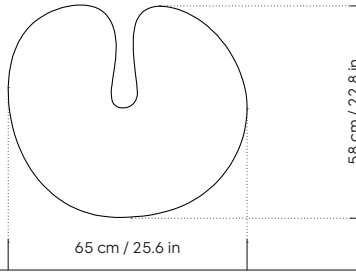


Side view

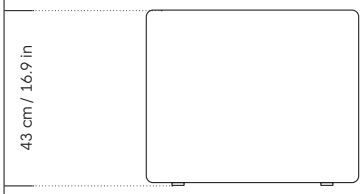

# Palma Pouf Medium

*Design by Kusheda Mensah*

A Palma Pouf upgrades any space. Graphic, arresting, refreshingly carefree, these elegant upholstered seats bring visual interest and facilitate interaction wherever they are used. Casual and unorthodox seating encourages constructive and thoughtful communication, observes designer Kusheda Mensah. Her Palma Poufs series for Hem consists of three decorative shapes made from a solid base and a soft but sturdy upper. Use them as focal points, disrupt a traditional seating arrangement or playfully juxtapose shape and texture with a single pouf. Encourage perching, parking, lounging. Palma Poufs are available in a wide range of finishes for supreme mix or match options.

| Product name | Finish | SKU | Product name | Finish | SKU |
|---|---|---|---|---|---|
| **Palma Pouf Medium** | Elmosoft 03009* | 92695 | **Palma Pouf Medium** | Steelcut 3 0190* | 92680 |
| | Elmosoft 54035* | 92693 | | Steelcut 3 0240* | 92679 |
| | Elmosoft 98015* | 92696 | | Steelcut 3 0265* | 31573 |
| | Elmosoft 99999* | 92694 | | Steelcut 3 0655* | 95929 |
| | Gentle 0193* | 92687 | | Steelcut 3 0682* | 92681 |
| | Gentle 0373* | 92686 | | Steelcut 3 0975 | 95931 |
| | Gentle 0443* | 92685 | | Storr 0612 | 95930 |
| | Gentle 0553* | 92682 | | Storr 1501* | 31574 |
| | Gentle 0733* | 92684 | | Storr 3405* | 95932 |
| | Gentle 0753* | 92683 | | | |
| | Loop Loop 002* | 92690 | | | |
| | Loop Loop 003* | 92688 | | | |
| | Loop Loop 004* | 92692 | | | |
| | Loop Loop 005* | 92689 | | | |
| | Loop Loop 006* | 92691 | | | |

**Upholstery**

*Elmosoft Leather*
by Elmo (Sweden)
Scandinavian Grain Leather, Semi-aniline
Lightfastness 6

*Gentle 2*
by Kvadrat (Netherlands)
60% New wool, 20% Nylon, 20% Polyester
90,000 Martindale
Pilling 4-5
Lightfastness 6-7
Flame resistance EN 1021: Part 1 & 2, BS 5852: Part 1, US Cal. TB 117

*Loop Loop*
by Dedar (Italy)
28% Polyester, 25% Acrylic, 24% Wool, 23% Recycled Cotton
52,000 Martindale
Pilling 4-5
Lightfastness 4-5
Flame resistance US Cal. TB 117-2013, UK BS5852 CIGAR. TEST

*Steelcut 3*
by Kvadrat (Netherlands)
90% New Wool, worsted 10% Nylon
100,000 Martindale
Pilling 3-4
Lightfastness 6
Flame resistance EN 1021: Part 1 & 2, US Cal. TB 117-2013, BS 5852: Part 1, UNI 9175 1IM

*Bute Storr*
by Bute Fabrics (Scotland)
97 % Pure New Wool, 3% Nylon
65,000 Martindale
Lightfastness 5
Flame resistance IMO FTP Code(2010) Annex 1, Part 8, BS 5852: Part 1 & 2 (Crib 5), US Cal. TB 121

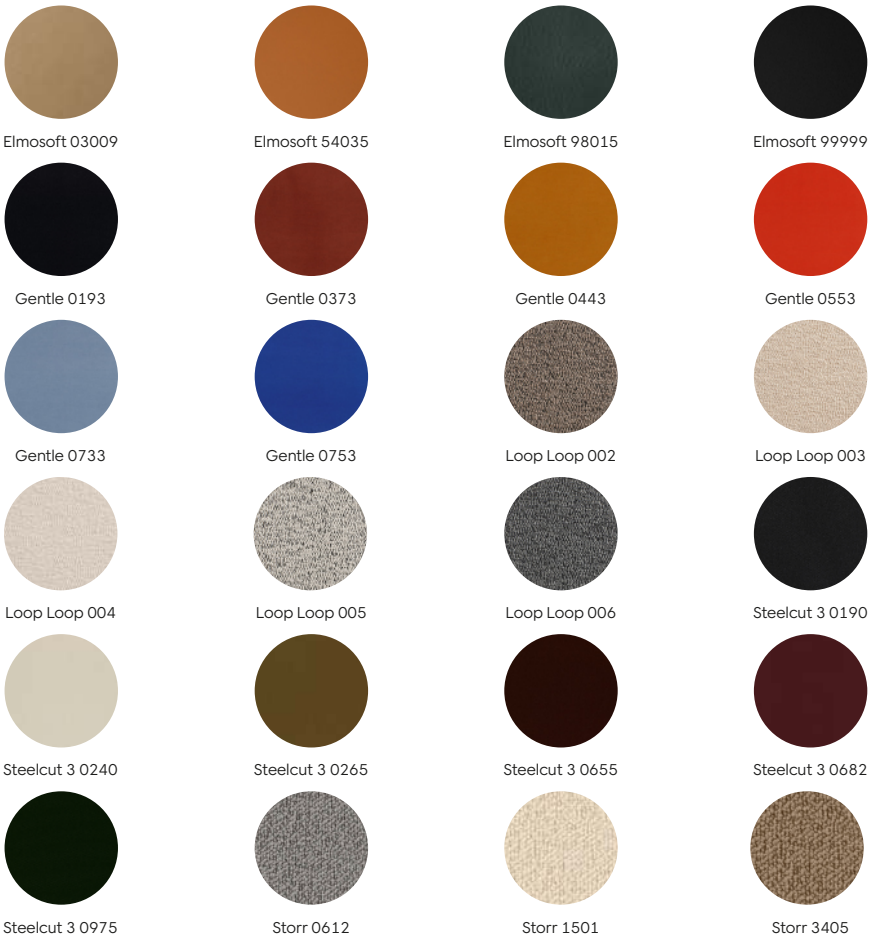


**Samples**
We supply samples of our material finishes. You can order them directly from hem.com/samples

***MTO**
Reach out to your local representative for the full selection of made-to-order options.

**Inside material**
PU Foam
Plywood Structure

**Country of origin**
Poland / Lithuania

**3D model**
3D files of all products are available on the product pages on hem.com

**Palma Pouf Medium**

Top view

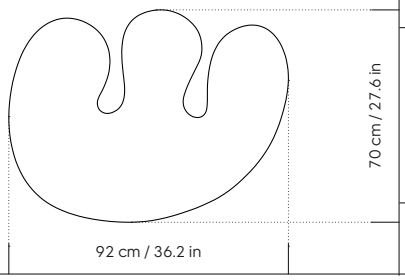


Side view

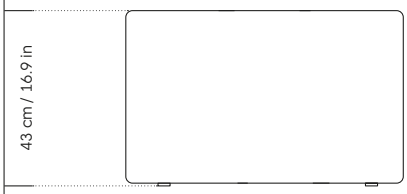

# Palma Pouf Large

*Design by Kusheda Mensah*

A Palma Pouf upgrades any space. Graphic, arresting, refreshingly carefree, these elegant upholstered seats bring visual interest and facilitate interaction wherever they are used. Casual and unorthodox seating encourages constructive and thoughtful communication, observes designer Kusheda Mensah. Her Palma Poufs series for Hem consists of three decorative shapes made from a solid base and a soft but sturdy upper. Use them as focal points, disrupt a traditional seating arrangement or playfully juxtapose shape and texture with a single pouf. Encourage perching, parking, lounging. Palma Poufs are available in a wide range of finishes for supreme mix or match options.

| Product name | Finish | SKU | Product name | Finish | SKU |
|---|---|---|---|---|---|
| **Palma Pouf Large** | Elmosoft 03009* | 92659 | **Palma Pouf Large** | Steelcut 3 0190* | 92644 |
| | Elmosoft 54035* | 92657 | | Steelcut 3 0240* | 92643 |
| | Elmosoft 98015* | 92660 | | Steelcut 3 0265* | 95952 |
| | Elmosoft 99999* | 92658 | | Steelcut 3 0655* | 31571 |
| | Gentle 0193* | 92651 | | Steelcut 3 0682* | 92645 |
| | Gentle 0373* | 92650 | | Steelcut 3 0975 | 95928 |
| | Gentle 0443* | 92649 | | Storr 0612 | 95925 |
| | Gentle 0553* | 92646 | | Storr 1501* | 95927 |
| | Gentle 0733* | 92648 | | Storr 3405* | 31572 |
| | Gentle 0753* | 92647 | | | |
| | Loop Loop 002* | 92654 | | | |
| | Loop Loop 003* | 92652 | | | |
| | Loop Loop 004* | 92656 | | | |
| | Loop Loop 005* | 92653 | | | |
| | Loop Loop 006* | 92655 | | | |

**Upholstery**

*Elmosoft Leather*
by Elmo (Sweden)
Scandinavian Grain Leather, Semi-aniline
Lightfastness 6

*Gentle 2*
by Kvadrat (Netherlands)
60% New wool, 20% Nylon, 20% Polyester
90,000 Martindale
Pilling 4-5
Lightfastness 6-7
Flame resistance EN 1021: Part 1 & 2, BS 5852: Part 1, US Cal. TB 117

*Loop Loop*
by Dedar (Italy)
28% Polyester, 25% Acrylic, 24% Wool, 23% Recycled Cotton
52,000 Martindale
Pilling 4-5
Lightfastness 4-5
Flame resistance US Cal. TB 117-2013, UK BS5852 CIGAR. TEST

*Steelcut 3*
by Kvadrat (Netherlands)
90% New Wool, worsted 10% Nylon
100,000 Martindale
Pilling 3-4
Lightfastness 6
Flame resistance EN 1021: Part 1 & 2, US Cal. TB 117-2013, BS 5852: Part 1, UNI 9175 1IM

*Bute Storr*
by Bute Fabrics (Scotland)
97 % Pure New Wool, 3% Nylon
65,000 Martindale
Lightfastness 5
Flame resistance IMO FTP Code(2010) Annex 1, Part 8, BS 5852: Part 1 & 2 (Crib 5), US Cal. TB 121

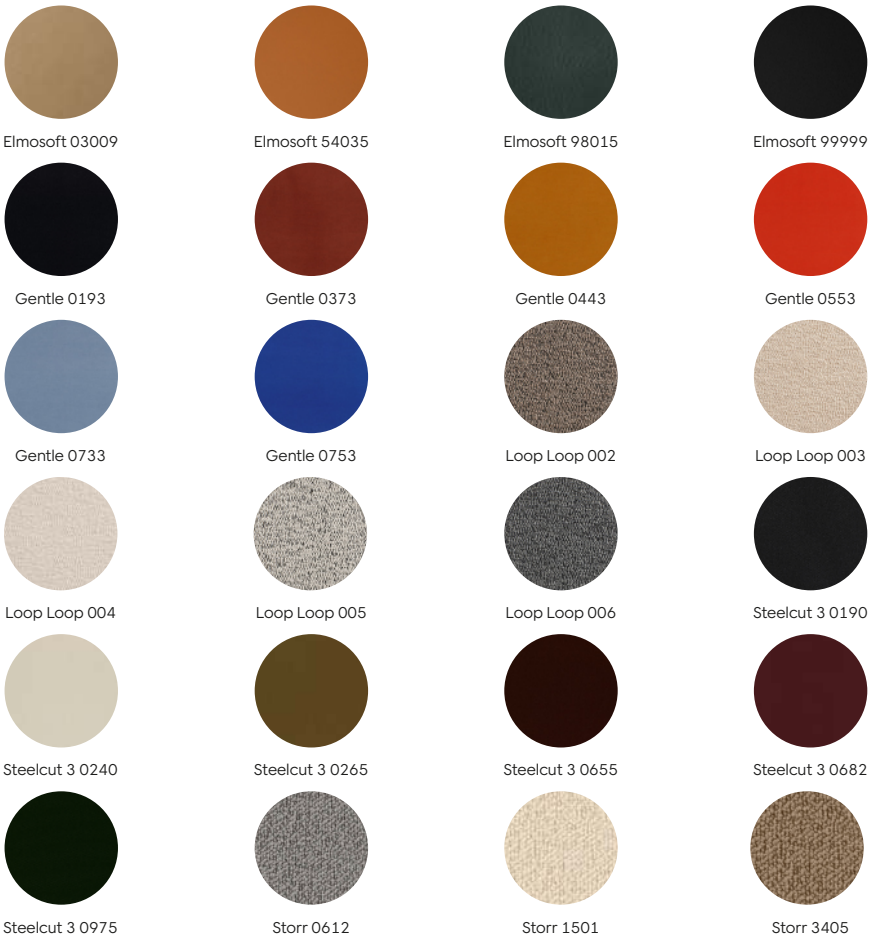


**Samples**
We supply samples of our material finishes. You can order them directly from hem.com/samples

***MTO**
Reach out to your local representative for the full selection of made-to-order options.

**Inside material**
PU Foam
Plywood Structure

**Country of origin**
Poland / Lithuania

**3D model**
3D files of all products are available on the product pages on hem.com

**Palma Pouf Medium**

Top view

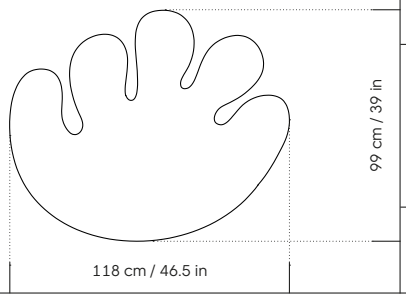


Side view

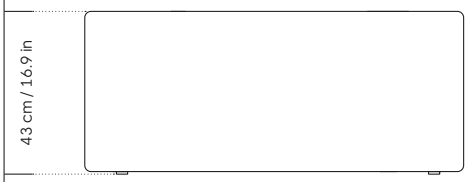

# Palma — Price List

| Product name | Finish | SKU | Retail Price SEK | List Price SEK (ex VAT) |
|---|---|---|---|---|
| **Curated Collection** | | | | |
| **Palma Pouf Large** | Elmosoft 02119 | 31577 | 33 224 | 27 014 |
| **Palma Pouf Large** | Elmosoft 03009 | 92659 | 32 879 | 26 726 |
| **Palma Pouf Large** | Elmosoft 54035 | 92657 | 32 879 | 26 726 |
| **Palma Pouf Large** | Elmosoft 98015 | 92660 | 32 879 | 26 726 |
| **Palma Pouf Large** | Elmosoft 99999 | 92658 | 32 879 | 26 726 |
| **Palma Pouf Large** | Gentle 0193 | 92651 | 29 314 | 23 828 |
| **Palma Pouf Large** | Gentle 0373 | 92650 | 29 314 | 23 828 |
| **Palma Pouf Large** | Gentle 0443 | 92649 | 29 314 | 23 828 |
| **Palma Pouf Large** | Gentle 0553 | 92646 | 29 314 | 23 828 |
| **Palma Pouf Large** | Gentle 0733 | 92648 | 29 314 | 23 828 |
| **Palma Pouf Large** | Gentle 0753 | 92647 | 29 314 | 23 828 |
| **Palma Pouf Large** | Loop Loop 002 | 92654 | 22 529 | 18 320 |
| **Palma Pouf Large** | Loop Loop 003 | 92652 | 22 529 | 18 320 |
| **Palma Pouf Large** | Loop Loop 004 | 92656 | 22 529 | 18 320 |
| **Palma Pouf Large** | Loop Loop 005 | 92653 | 22 529 | 18 320 |
| **Palma Pouf Large** | Loop Loop 006 | 92655 | 22 529 | 18 320 |
| **Palma Pouf Large** | Steelcut 3 0190 | 92644 | 18 849 | 15 330 |
| **Palma Pouf Large** | Steelcut 3 0240 | 92643 | 18 849 | 15 330 |
| **Palma Pouf Large** | Steelcut 3 0265 | 95952 | 18 849 | 15 330 |
| **Palma Pouf Large** | Steelcut 3 0655 | 31571 | 18 849 | 15 330 |
| **Palma Pouf Large** | Steelcut 3 0682 | 92645 | 18 849 | 15 330 |
| **Palma Pouf Large** | Steelcut 3 0975 | 95928 | 18 849 | 15 330 |
| **Palma Pouf Large** | Storr 0612 | 95925 | 23 449 | 19 067 |
| **Palma Pouf Large** | Storr 1501 | 95927 | 23 449 | 19 067 |
| **Palma Pouf Large** | Storr 3405 | 31572 | 23 449 | 19 067 |
| **Palma Pouf Medium** | Elmosoft 03009 | 92695 | 23 449 | 19 067 |
| **Palma Pouf Medium** | Elmosoft 54035 | 92693 | 23 449 | 19 067 |
| **Palma Pouf Medium** | Elmosoft 98015 | 92696 | 23 449 | 19 067 |
| **Palma Pouf Medium** | Elmosoft 99999 | 92694 | 23 449 | 19 067 |
| **Palma Pouf Medium** | Gentle 0193 | 92687 | 19 999 | 16 261 |
| **Palma Pouf Medium** | Gentle 0373 | 92686 | 19 999 | 16 261 |
| **Palma Pouf Medium** | Gentle 0443 | 92685 | 19 999 | 16 261 |
| **Palma Pouf Medium** | Gentle 0553 | 92682 | 19 999 | 16 261 |
| **Palma Pouf Medium** | Gentle 0733 | 92684 | 19 999 | 16 261 |
| **Palma Pouf Medium** | Gentle 0753 | 92683 | 19 999 | 16 261 |
| **Palma Pouf Medium** | Loop Loop 002 | 92690 | 15 284 | 12 420 |
| **Palma Pouf Medium** | Loop Loop 003 | 92688 | 15 284 | 12 420 |
| **Palma Pouf Medium** | Loop Loop 004 | 92692 | 15 284 | 12 420 |
| **Palma Pouf Medium** | Loop Loop 005 | 92689 | 15 284 | 12 420 |
| **Palma Pouf Medium** | Loop Loop 006 | 92691 | 15 284 | 12 420 |
| **Palma Pouf Medium** | Steelcut 3 0190 | 92680 | 12 984 | 10 557 |
| **Palma Pouf Medium** | Steelcut 3 0240 | 92679 | 12 984 | 10 557 |
| **Palma Pouf Medium** | Steelcut 3 0265 | 31573 | 12 984 | 10 557 |
| **Palma Pouf Medium** | Steelcut 3 0655 | 95929 | 12 984 | 10 557 |
| **Palma Pouf Medium** | Steelcut 3 0682 | 92681 | 12 984 | 10 557 |
| **Palma Pouf Medium** | Steelcut 3 0975 | 95931 | 12 984 | 10 557 |
| **Palma Pouf Medium** | Storr 0612 | 95930 | 15 859 | 12 892 |
| **Palma Pouf Medium** | Storr 1501 | 31574 | 15 859 | 12 892 |
| **Palma Pouf Medium** | Storr 3405 | 95932 | 15 859 | 12 892 |
| **Palma Pouf Small** | Elmosoft 03009 | 92731 | 16 434 | 13 363 |
| **Palma Pouf Small** | Elmosoft 54035 | 92729 | 16 434 | 13 363 |
| **Palma Pouf Small** | Elmosoft 98015 | 92732 | 16 434 | 13 363 |
| **Palma Pouf Small** | Elmosoft 99999 | 92730 | 16 434 | 13 363 |
| **Palma Pouf Small** | Gentle 0193 | 92723 | 15 284 | 12 420 |
| **Palma Pouf Small** | Gentle 0373 | 92722 | 15 284 | 12 420 |
| **Palma Pouf Small** | Gentle 0443 | 92721 | 15 284 | 12 420 |
| **Palma Pouf Small** | Gentle 0553 | 92718 | 15 284 | 12 420 |
| **Palma Pouf Small** | Gentle 0733 | 92720 | 15 284 | 12 420 |
| **Palma Pouf Small** | Gentle 0753 | 92719 | 15 284 | 12 420 |
| **Palma Pouf Small** | Loop Loop 002 | 92726 | 11 719 | 9 522 |
| **Palma Pouf Small** | Loop Loop 003 | 92724 | 11 719 | 9 522 |
| **Palma Pouf Small** | Loop Loop 004 | 92728 | 11 719 | 9 522 |
| **Palma Pouf Small** | Loop Loop 005 | 92725 | 11 719 | 9 522 |
| **Palma Pouf Small** | Loop Loop 006 | 92727 | 11 719 | 9 522 |
| **Palma Pouf Small** | Steelcut 3 0190 | 92716 | 9 419 | 7 659 |
| **Palma Pouf Small** | Steelcut 3 0240 | 92715 | 9 419 | 7 659 |
| **Palma Pouf Small** | Steelcut 3 0265 | 95926 | 9 419 | 7 659 |
| **Palma Pouf Small** | Steelcut 3 0655 | 95933 | 9 419 | 7 659 |
| **Palma Pouf Small** | Steelcut 3 0682 | 92717 | 9 419 | 7 659 |
| **Palma Pouf Small** | Steelcut 3 0975 | 31576 | 9 419 | 7 659 |
| **Palma Pouf Small** | Storr 0612 | 31575 | 12 294 | 9 994 |
| **Palma Pouf Small** | Storr 1501 | 95935 | 12 294 | 9 994 |
| **Palma Pouf Small** | Storr 3405 | 95936 | 12 294 | 9 994 |

# Palma — Price List

| Product name | Finish | SKU | Retail Price SEK | List Price SEK (ex VAT) |
|---|---|---|---|---|
| **Graded-in Textile*** | | | | |
| **Palma Pouf Large** | Grade 1 | | 20 344 | 16 537 |
| **Palma Pouf Large** | Grade 2 | | 21 724 | 17 664 |
| **Palma Pouf Large** | Grade 3 | | 22 759 | 18 504 |
| **Palma Pouf Large** | Grade 4 | | 23 679 | 19 251 |
| **Palma Pouf Large** | Grade 5 | | 25 174 | 20 470 |
| **Palma Pouf Large** | Grade 6 | | 27 129 | 22 057 |
| **Palma Pouf Medium** | Grade 1 | | 12 869 | 10 465 |
| **Palma Pouf Medium** | Grade 2 | | 13 904 | 11 305 |
| **Palma Pouf Medium** | Grade 3 | | 14 594 | 11 868 |
| **Palma Pouf Medium** | Grade 4 | | 15 284 | 12 420 |
| **Palma Pouf Medium** | Grade 5 | | 16 549 | 13 455 |
| **Palma Pouf Medium** | Grade 6 | | 17 929 | 14 571 |
| **Palma Pouf Small** | Grade 1 | | 9 649 | 7 843 |
| **Palma Pouf Small** | Grade 2 | | 10 339 | 8 407 |
| **Palma Pouf Small** | Grade 3 | | 10 799 | 8 775 |
| **Palma Pouf Small** | Grade 4 | | 11 259 | 9 154 |
| **Palma Pouf Small** | Grade 5 | | 11 949 | 9 718 |
| **Palma Pouf Small** | Grade 6 | | 13 099 | 10 649 |

*Please make sure to check pro.hem.com for the most up to date information on finishes and stock availability.

# Palo Block Single-seater Sofa

*Design by Hem*

Our signature Palo Sofa system is the gift that keeps on giving. It is even more flexible, functional and hardworking with the addition of Palo Block Sofa. The system consists of different sizes of back and side panels, easy-apply connectors and partitions, all working together to create fully modular, private seating spaces. This makes Palo Block Sofa the ideal solution for busy public areas, work environments, or even domestic spaces where a little respite is required. Endless configurations are possible; Palo Block's extreme versatility is its super strength.

**Upholstery**
*Amdal*
by GU (Norway)
70% Virgin Wool, 30% Viscose
100,000 Martindale
Pilling 4
Lightfastness 5-7
Flame resistance Flame resistance EN 1021: Part 1 & 2, US Cal. TB 117-2013, BS 5852: Part 1 & 2 (Crib 5)

*Sera*
by Rohi (Germany)
94% Virgin Wool, 6% Polyamide
122,000 Martindale
Pilling 4-5
Lightfastness 5-8
Flame resistance EN 1021: Part 1 & 2, US Cal. TB 117-2013, BS 5852: Part 1

*Autumn*
by Kvadrat (Denmark)
100% Recycled Polyester
50,000 Martindale
Pilling 4-5
Lightfastness 6-7
Flame resistance ASTM E 84 Adhered, ASTM E84 Class A Unadhered, EN 1021: Part 1 & 2, IMO 2010 FTP Code Part 8, US Cal. TB 117-2013

*Velluto Coex*
by Chioccarello (Italy)
100% Cotton
65,000 Martindale
Pilling 4-5
Lightfastness 5
Flame resistance IMO, 1 IM UNI 9175, EN 1021-1:2006, EN 1021-2:2006, CRIB 5, TB 117:2013

**Leg material**
*Steel*
Powder coated

**Inside material**
PU foam
Wooden structure

**Country of origin**
Lithuania

**3D model**
3D files of all products are available on the product pages on hem.com

**Tests & certifications**
EN 16139:2013 – L2: Extreme use – Furniture – Strength, durability and safety – Requirements for non-domestic seating

ANSI/BIFMA X5.4-2020 American National Standard for Office and Institutional Furnishings – Public and Lounge Seating

**Accesories**
Each module can be configured with or without power outlet.

Choose between tall or low legs.

**Modularity**
This is a modular product that can be configured freely to fit your needs. Reach out to info@hem.com for assistance

**Beige**
*Amdal (350)*

**Chalk**
*Amdal (130)*

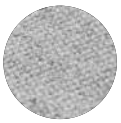

**Grey**
*Amdal (110)*

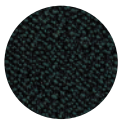

**Pine**
*Sera (Hem exclusive)*

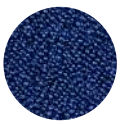

**Cobalt**
*Sera (Hem exclusive)*

**Rosewood**
*Sera*

**0361**
*Autumn*

**0221**
*Autumn*

**VL30**
*Velluto Coex*

**Jet Black (RAL 9005)**
*Leg color*

**Samples**
We supply samples of our material finishes. You can order them directly from hem.com/samples

**Graded-in Textile and Made-To-Order**
Please refer to the price list or reach out to your local representative for our made-to-order options

**Palo Block Single-seater**

Top view

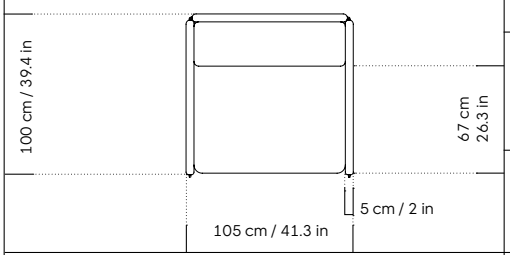


**Palo Block Single-seater Low Back**

Front view

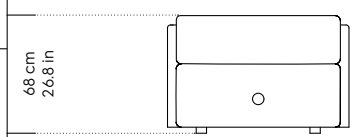


**Palo Block Single-seater Medium Back**

Front view

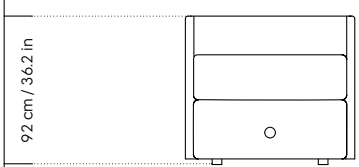


**Palo Block Single-seater High Back**

Front view

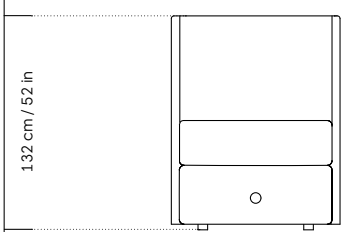

# Palo Block 2-seater Sofa

*Design by Hem*

Our signature Palo Sofa system is the gift that keeps on giving. It is even more flexible, functional and hardworking with the addition of Palo Block Sofa. The system consists of different sizes of back and side panels, easy-apply connectors and partitions, all working together to create fully modular, private seating spaces. This makes Palo Block Sofa the ideal solution for busy public areas, work environments, or even domestic spaces where a little respite is required. Endless configurations are possible; Palo Block's extreme versatility is its super strength.

**Upholstery**
*Amdal*
by GU (Norway)
70% Virgin Wool, 30% Viscose
100,000 Martindale
Pilling 4
Lightfastness 5-7
Flame resistance Flame resistance EN 1021: Part 1 & 2, US Cal. TB 117-2013, BS 5852: Part 1 & 2 (Crib 5)

*Sera*
by Rohi (Germany)
94% Virgin Wool, 6% Polyamide
122,000 Martindale
Pilling 4-5
Lightfastness 5-8
Flame resistance EN 1021: Part 1 & 2, US Cal. TB 117-2013, BS 5852: Part 1

*Autumn*
by Kvadrat (Denmark)
100% Recycled Polyester
50,000 Martindale
Pilling 4-5
Lightfastness 6-7
Flame resistance ASTM E 84 Adhered, ASTM E84 Class A Unadhered, EN 1021: Part 1 & 2, IMO 2010 FTP Code Part 8, US Cal. TB 117-2013

*Velluto Coex*
by Chioccarello (Italy)
100% Cotton
65,000 Martindale
Pilling 4-5
Lightfastness 5
Flame resistance IMO, 1 IM UNI 9175, EN 1021-1:2006, EN 1021-2:2006, CRIB 5, TB 117:2013

**Leg material**
*Steel*
Powder coated

**Inside material**
PU foam
Wooden structure

**Country of origin**
Lithuania

**3D model**
3D files of all products are available on the product pages on hem.com

**Tests & certifications**
EN 16139:2013 – L2: Extreme use – Furniture – Strength, durability and safety – Requirements for non-domestic seating

ANSI/BIFMA X5.4-2020 American National Standard for Office and Institutional Furnishings – Public and Lounge Seating

**Accesories**
Each module can be configured with or without power outlet.

Choose between tall or low legs.

**Modularity**
This is a modular product that can be configured freely to fit your needs. Reach out to info@hem.com for assistance

**Beige**
*Amdal (350)*

**Chalk**
*Amdal (130)*

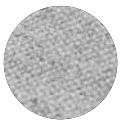

**Grey**
*Amdal (110)*

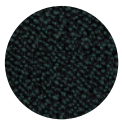

**Pine**
*Sera (Hem exclusive)*

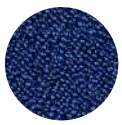

**Cobalt**
*Sera (Hem exclusive)*

**Rosewood**
*Sera*

**0361**
*Autumn*

**0221**
*Autumn*

**VL30**
*Velluto Coex*

**Jet Black (RAL 9005)**
*Leg color*

**Samples**
We supply samples of our material finishes. You can order them directly from hem.com/samples

**Graded-in Textile and Made-To-Order**
Please refer to the price list or reach out to your local representative for our made-to-order options

**Palo Block 2-seater Sofa**

Top view

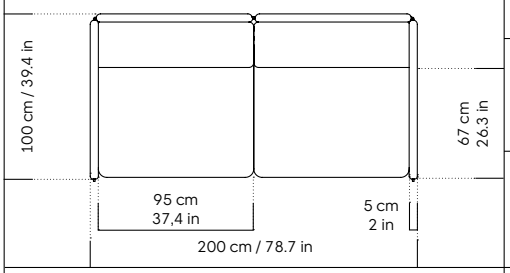


**Palo Block 2-seater Sofa Low Back**

Front view

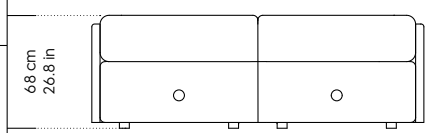


**Palo Block 2-seater Sofa Medium Back**

Front view

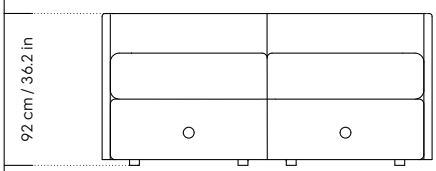


**Palo Block 2-seater Sofa High Back**

Front view

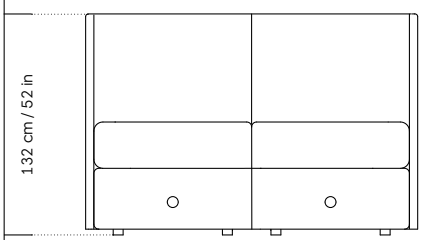

# Palo Block 2-seater Sofa with Armrests

*Design by Hem*

Our signature Palo Sofa system is the gift that keeps on giving. It is even more flexible, functional and hardworking with the addition of Palo Block Sofa. The system consists of different sizes of back and side panels, easy-apply connectors and partitions, all working together to create fully modular, private seating spaces. This makes Palo Block Sofa the ideal solution for busy public areas, work environments, or even domestic spaces where a little respite is required. Endless configurations are possible; Palo Block's extreme versatility is its super strength.

**Upholstery**
*Amdal*
by GU (Norway)
70% Virgin Wool, 30% Viscose
100,000 Martindale
Pilling 4
Lightfastness 5-7
Flame resistance Flame resistance EN 1021: Part 1 & 2, US Cal. TB 117-2013, BS 5852: Part 1 & 2 (Crib 5)

*Sera*
by Rohi (Germany)
94% Virgin Wool, 6% Polyamide
122,000 Martindale
Pilling 4-5
Lightfastness 5-8
Flame resistance EN 1021: Part 1 & 2, US Cal. TB 117-2013, BS 5852: Part 1

*Autumn*
by Kvadrat (Denmark)
100% Recycled Polyester
50,000 Martindale
Pilling 4-5
Lightfastness 6-7
Flame resistance ASTM E 84 Adhered, ASTM E84 Class A Unadhered, EN 1021: Part 1 & 2, IMO 2010 FTP Code Part 8, US Cal. TB 117-2013

*Velluto Coex*
by Chioccarello (Italy)
100% Cotton
65,000 Martindale
Pilling 4-5
Lightfastness 5
Flame resistance IMO, 1 IM UNI 9175, EN 1021-1:2006, EN 1021-2:2006, CRIB 5, TB 117:2013

**Leg material**
*Steel*
Powder coated

**Inside material**
PU foam
Wooden structure

**Country of origin**
Lithuania

**3D model**
3D files of all products are available on the product pages on hem.com

**Tests & certifications**
EN 16139:2013 – L2: Extreme use – Furniture – Strength, durability and safety – Requirements for non-domestic seating

ANSI/BIFMA X5.4-2020 American National Standard for Office and Institutional Furnishings – Public and Lounge Seating

**Accesories**
Each module can be configured with or without power outlet.

Choose between tall or low legs.

**Modularity**
This is a modular product that can be configured freely to fit your needs. Reach out to info@hem.com for assistance

**Beige**
*Amdal (350)*

**Chalk**
*Amdal (130)*

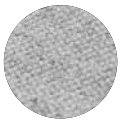

**Grey**
*Amdal (110)*

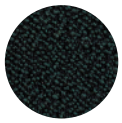

**Pine**
*Sera (Hem exclusive)*

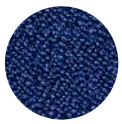

**Cobalt**
*Sera (Hem exclusive)*

**Rosewood**
*Sera*

**0361**
*Autumn*

**0221**
*Autumn*

**VL30**
*Velluto Coex*

**Jet Black (RAL 9005)**
*Leg color*

**Samples**
We supply samples of our material finishes. You can order them directly from hem.com/samples

**Graded-in Textile and Made-To-Order**
Please refer to the price list or reach out to your local representative for our made-to-order options

**Palo Block 2-seater Sofa with Armrests**

Top view

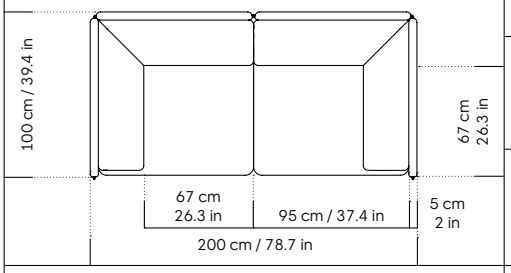


**Palo Block 2-seater Sofa Low Back with Armrests**

Front view

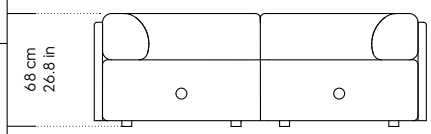


**Palo Block 2-seater Sofa Medium Back with Armrests**

Front view

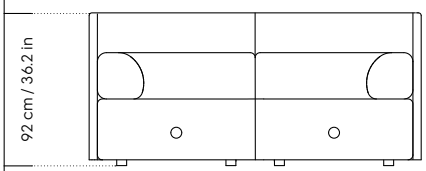


**Palo Block 2-seater Sofa High Back with Armrests**

Front view

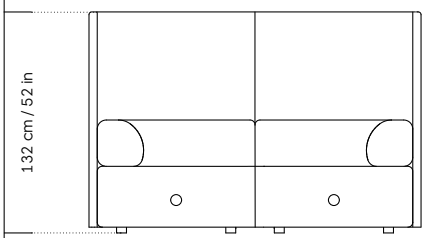

# Palo Block 3-seater Sofa

*Design by Hem*

Our signature Palo Sofa system is the gift that keeps on giving. It is even more flexible, functional and hardworking with the addition of Palo Block Sofa. The system consists of different sizes of back and side panels, easy-apply connectors and partitions, all working together to create fully modular, private seating spaces. This makes Palo Block Sofa the ideal solution for busy public areas, work environments, or even domestic spaces where a little respite is required. Endless configurations are possible; Palo Block's extreme versatility is its super strength.

**Upholstery**
*Amdal*
by GU (Norway)
70% Virgin Wool, 30% Viscose
100,000 Martindale
Pilling 4
Lightfastness 5-7
Flame resistance Flame resistance EN 1021: Part 1 & 2, US Cal. TB 117-2013, BS 5852: Part 1 & 2 (Crib 5)

*Sera*
by Rohi (Germany)
94% Virgin Wool, 6% Polyamide
122,000 Martindale
Pilling 4-5
Lightfastness 5-8
Flame resistance EN 1021: Part 1 & 2, US Cal. TB 117-2013, BS 5852: Part 1

*Autumn*
by Kvadrat (Denmark)
100% Recycled Polyester
50,000 Martindale
Pilling 4-5
Lightfastness 6-7
Flame resistance ASTM E 84 Adhered, ASTM E84 Class A Unadhered, EN 1021: Part 1 & 2, IMO 2010 FTP Code Part 8, US Cal. TB 117-2013

*Velluto Coex*
by Chioccarello (Italy)
100% Cotton
65,000 Martindale
Pilling 4-5
Lightfastness 5
Flame resistance IMO, 1 IM UNI 9175, EN 1021-1:2006, EN 1021-2:2006, CRIB 5, TB 117:2013

**Leg material**
*Steel*
Powder coated

**Inside material**
PU foam
Wooden structure

**Country of origin**
Lithuania

**3D model**
3D files of all products are available on the product pages on hem.com

**Tests & certifications**
EN 16139:2013 – L2: Extreme use – Furniture – Strength, durability and safety – Requirements for non-domestic seating

ANSI/BIFMA X5.4-2020 American National Standard for Office and Institutional Furnishings – Public and Lounge Seating

**Accesories**
Each module can be configured with or without power outlet.

Choose between tall or low legs.

**Modularity**
This is a modular product that can be configured freely to fit your needs. Reach out to info@hem.com for assistance

**Beige**
*Amdal (350)*

**Chalk**
*Amdal (130)*

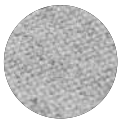

**Grey**
*Amdal (110)*

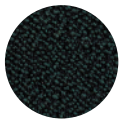

**Pine**
*Sera (Hem exclusive)*

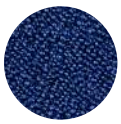

**Cobalt**
*Sera (Hem exclusive)*

**Rosewood**
*Sera*

**0361**
*Autumn*

**0221**
*Autumn*

**VL30**
*Velluto Coex*

**Jet Black (RAL 9005)**
*Leg color*

**Samples**
We supply samples of our material finishes. You can order them directly from hem.com/samples

**Graded-in Textile and Made-To-Order**
Please refer to the price list or reach out to your local representative for our made-to-order options

**Palo Block 3-seater Sofa**

Top view

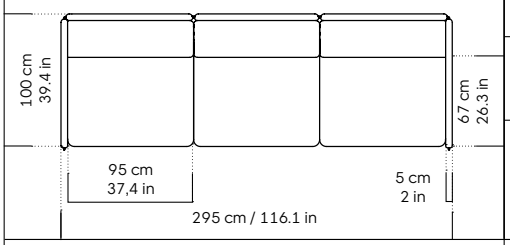


**Palo Block 3-seater Sofa Low Back**

Front view

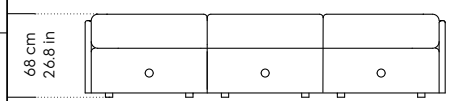


**Palo Block 3-seater Sofa Medium Back**

Front view

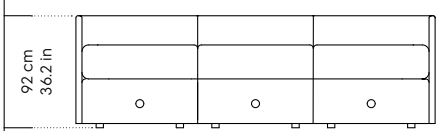


**Palo Block 3-seater Sofa High Back**

Front view

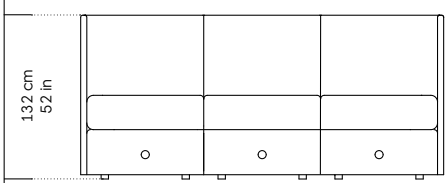

# Palo Block 3-seater Sofa with Armrests

*Design by Hem*

Our signature Palo Sofa system is the gift that keeps on giving. It is even more flexible, functional and hardworking with the addition of Palo Block Sofa. The system consists of different sizes of back and side panels, easy-apply connectors and partitions, all working together to create fully modular, private seating spaces. This makes Palo Block Sofa the ideal solution for busy public areas, work environments, or even domestic spaces where a little respite is required. Endless configurations are possible; Palo Block's extreme versatility is its super strength.

**Upholstery**
*Amdal*
by GU (Norway)
70% Virgin Wool, 30% Viscose
100,000 Martindale
Pilling 4
Lightfastness 5-7
Flame resistance Flame resistance EN 1021: Part 1 & 2, US Cal. TB 117-2013, BS 5852: Part 1 & 2 (Crib 5)

*Sera*
by Rohi (Germany)
94% Virgin Wool, 6% Polyamide
122,000 Martindale
Pilling 4-5
Lightfastness 5-8
Flame resistance EN 1021: Part 1 & 2, US Cal. TB 117-2013, BS 5852: Part 1

*Autumn*
by Kvadrat (Denmark)
100% Recycled Polyester
50,000 Martindale
Pilling 4-5
Lightfastness 6-7
Flame resistance ASTM E 84 Adhered, ASTM E84 Class A Unadhered, EN 1021: Part 1 & 2, IMO 2010 FTP Code Part 8, US Cal. TB 117-2013

*Velluto Coex*
by Chioccarello (Italy)
100% Cotton
65,000 Martindale
Pilling 4-5
Lightfastness 5
Flame resistance IMO, 1 IM UNI 9175, EN 1021-1:2006, EN 1021-2:2006, CRIB 5, TB 117:2013

**Leg material**
*Steel*
Powder coated

**Inside material**
PU foam
Wooden structure

**Country of origin**
Lithuania

**3D model**
3D files of all products are available on the product pages on hem.com

**Tests & certifications**
EN 16139:2013 – L2: Extreme use – Furniture – Strength, durability and safety – Requirements for non-domestic seating

ANSI/BIFMA X5.4-2020 American National Standard for Office and Institutional Furnishings – Public and Lounge Seating

**Accesories**
Each module can be configured with or without power outlet.

Choose between tall or low legs.

**Modularity**
This is a modular product that can be configured freely to fit your needs. Reach out to info@hem.com for assistance

**Beige**
*Amdal (350)*

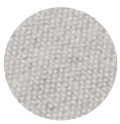

**Chalk**
*Amdal (130)*

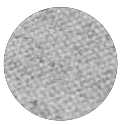

**Grey**
*Amdal (110)*

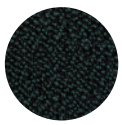

**Pine**
*Sera (Hem exclusive)*

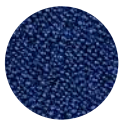

**Cobalt**
*Sera (Hem exclusive)*

**Rosewood**
*Sera*

**0361**
*Autumn*

**0221**
*Autumn*

**VL30**
*Velluto Coex*

**Jet Black (RAL 9005)**
*Leg color*

**Samples**
We supply samples of our material finishes. You can order them directly from hem.com/samples

**Graded-in Textile and Made-To-Order**
Please refer to the price list or reach out to your local representative for our made-to-order options

**Palo Block 3-seater Sofa with Armrests**

Top view

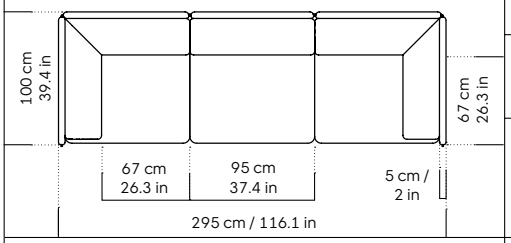


**Palo Block 3-seater Sofa Low Back with Armrests**

Front view

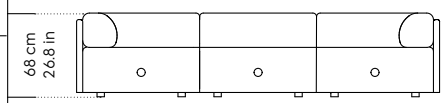


**Palo Block 3-seater Sofa Medium Back with Armrests**

Front view

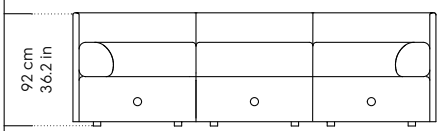


**Palo Block 3-seater Sofa High Back with Armrests**

Front view

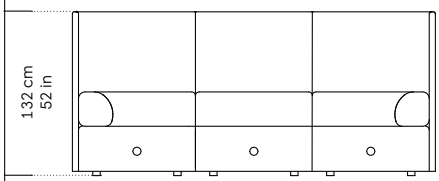

# Palo Block — Price List

| Product name | Finish | SKU | Retail Price SEK | List Price SEK (ex VAT) |
|---|---|---|---|---|
| **Curated Collection** | | | | |
| **Palo Block 2-seater Sofa High Back** | Amdal 110 | 94417 | 59 214 | 48 139 |
| **Palo Block 2-seater Sofa High Back** | Amdal 130 | 94418 | 59 214 | 48 139 |
| **Palo Block 2-seater Sofa High Back** | Amdal 280 | 94419 | 59 214 | 48 139 |
| **Palo Block 2-seater Sofa High Back** | Autumn 221 | 94395 | 49 324 | 40 101 |
| **Palo Block 2-seater Sofa High Back** | Autumn 361 | 94394 | 49 324 | 40 101 |
| **Palo Block 2-seater Sofa High Back** | Beige | 31390 | 59 214 | 48 139 |
| **Palo Block 2-seater Sofa High Back** | Pine | 31391 | 69 104 | 56 178 |
| **Palo Block 2-seater Sofa High Back** | Sera Cobalt | 94389 | 69 104 | 56 178 |
| **Palo Block 2-seater Sofa High Back** | Velluto Coex VL30 | 31921 | 74 739 | 60 766 |
| **Palo Block 2-seater Sofa High Back with Armrests** | Amdal 110 | 94603 | 65 884 | 53 567 |
| **Palo Block 2-seater Sofa High Back with Armrests** | Amdal 130 | 94604 | 65 884 | 53 567 |
| **Palo Block 2-seater Sofa High Back with Armrests** | Amdal 280 | 94605 | 65 884 | 53 567 |
| **Palo Block 2-seater Sofa High Back with Armrests** | Autumn 221 | 94581 | 56 109 | 45 621 |
| **Palo Block 2-seater Sofa High Back with Armrests** | Autumn 361 | 94580 | 56 109 | 45 621 |
| **Palo Block 2-seater Sofa High Back with Armrests** | Beige | 31392 | 65 884 | 53 567 |
| **Palo Block 2-seater Sofa High Back with Armrests** | Pine | 31393 | 75 659 | 61 514 |
| **Palo Block 2-seater Sofa High Back with Armrests** | Sera Cobalt | 94575 | 75 659 | 61 514 |
| **Palo Block 2-seater Sofa High Back with Armrests** | Velluto Coex VL30 | 31922 | 80 489 | 65 435 |
| **Palo Block 2-seater Sofa Low Back** | Amdal 110 | 94541 | 49 899 | 40 572 |
| **Palo Block 2-seater Sofa Low Back** | Amdal 130 | 94542 | 49 899 | 40 572 |
| **Palo Block 2-seater Sofa Low Back** | Amdal 280 | 94543 | 49 899 | 40 572 |
| **Palo Block 2-seater Sofa Low Back** | Autumn 221 | 94519 | 42 424 | 34 489 |
| **Palo Block 2-seater Sofa Low Back** | Autumn 361 | 94518 | 42 424 | 34 489 |
| **Palo Block 2-seater Sofa Low Back** | Beige | 31394 | 49 899 | 40 572 |
| **Palo Block 2-seater Sofa Low Back** | Pine | 31395 | 57 374 | 46 644 |
| **Palo Block 2-seater Sofa Low Back** | Sera Cobalt | 94513 | 57 374 | 46 644 |
| **Palo Block 2-seater Sofa Low Back** | Velluto Coex VL30 | 31923 | 58 639 | 47 679 |
| **Palo Block 2-seater Sofa Low Back with Armrests** | Amdal 110 | 94727 | 56 454 | 45 897 |
| **Palo Block 2-seater Sofa Low Back with Armrests** | Amdal 130 | 94728 | 56 454 | 45 897 |
| **Palo Block 2-seater Sofa Low Back with Armrests** | Amdal 280 | 94729 | 56 454 | 45 897 |
| **Palo Block 2-seater Sofa Low Back with Armrests** | Autumn 221 | 94705 | 48 979 | 39 825 |
| **Palo Block 2-seater Sofa Low Back with Armrests** | Autumn 361 | 94704 | 48 979 | 39 825 |
| **Palo Block 2-seater Sofa Low Back with Armrests** | Beige | 31396 | 56 454 | 45 897 |
| **Palo Block 2-seater Sofa Low Back with Armrests** | Pine | 31397 | 63 929 | 51 980 |
| **Palo Block 2-seater Sofa Low Back with Armrests** | Sera Cobalt | 94699 | 63 929 | 51 980 |
| **Palo Block 2-seater Sofa Low Back with Armrests** | Velluto Coex VL30 | 31924 | 68 989 | 56 086 |
| **Palo Block 2-seater Sofa Medium Back** | Amdal 110 | 94479 | 56 914 | 46 276 |
| **Palo Block 2-seater Sofa Medium Back** | Amdal 130 | 94480 | 56 914 | 46 276 |
| **Palo Block 2-seater Sofa Medium Back** | Amdal 280 | 94481 | 56 914 | 46 276 |
| **Palo Block 2-seater Sofa Medium Back** | Autumn 221 | 94457 | 49 439 | 40 193 |
| **Palo Block 2-seater Sofa Medium Back** | Autumn 361 | 94456 | 49 439 | 40 193 |
| **Palo Block 2-seater Sofa Medium Back** | Beige | 31398 | 56 914 | 46 276 |
| **Palo Block 2-seater Sofa Medium Back** | Pine | 31399 | 64 389 | 52 348 |
| **Palo Block 2-seater Sofa Medium Back** | Sera Cobalt | 94451 | 64 389 | 52 348 |
| **Palo Block 2-seater Sofa Medium Back** | Velluto Coex VL30 | 31925 | 68 989 | 56 086 |
| **Palo Block 2-seater Sofa Medium Back with Armrests** | Amdal 110 | 94665 | 63 469 | 51 601 |
| **Palo Block 2-seater Sofa Medium Back with Armrests** | Amdal 130 | 94666 | 63 469 | 51 601 |
| **Palo Block 2-seater Sofa Medium Back with Armrests** | Amdal 280 | 94667 | 63 469 | 51 601 |
| **Palo Block 2-seater Sofa Medium Back with Armrests** | Autumn 221 | 94643 | 55 994 | 45 529 |
| **Palo Block 2-seater Sofa Medium Back with Armrests** | Autumn 361 | 94642 | 55 994 | 45 529 |
| **Palo Block 2-seater Sofa Medium Back with Armrests** | Beige | 31400 | 63 469 | 51 601 |
| **Palo Block 2-seater Sofa Medium Back with Armrests** | Pine | 31401 | 70 944 | 57 673 |
| **Palo Block 2-seater Sofa Medium Back with Armrests** | Sera Cobalt | 94637 | 70 944 | 57 673 |
| **Palo Block 2-seater Sofa Medium Back with Armrests** | Velluto Coex VL30 | 31926 | 75 889 | 61 698 |
| **Palo Block 3-seater Sofa High Back** | Amdal 110 | 94789 | 82 099 | 66 746 |
| **Palo Block 3-seater Sofa High Back** | Amdal 130 | 94790 | 82 099 | 66 746 |
| **Palo Block 3-seater Sofa High Back** | Amdal 280 | 94791 | 82 099 | 66 746 |
| **Palo Block 3-seater Sofa High Back** | Autumn 221 | 94767 | 69 104 | 56 178 |
| **Palo Block 3-seater Sofa High Back** | Autumn 361 | 94766 | 69 104 | 56 178 |
| **Palo Block 3-seater Sofa High Back** | Beige | 31402 | 82 099 | 66 746 |
| **Palo Block 3-seater Sofa High Back** | Pine | 31403 | 95 094 | 77 315 |
| **Palo Block 3-seater Sofa High Back** | Sera Cobalt | 94761 | 95 094 | 77 315 |
| **Palo Block 3-seater Sofa High Back** | Velluto Coex VL30 | 31927 | 98 889 | 80 397 |

# Palo Block — Price List

| Product name | Finish | SKU | Retail Price SEK | List Price SEK (ex VAT) |
|---|---|---|---|---|
| **Curated Collection** | | | | |
| **Palo Block 3-seater Sofa High Back with Armrests** | Amdal 110 | 94975 | 88 654 | 72 071 |
| **Palo Block 3-seater Sofa High Back with Armrests** | Amdal 130 | 94976 | 88 654 | 72 071 |
| **Palo Block 3-seater Sofa High Back with Armrests** | Amdal 280 | 94977 | 88 654 | 72 071 |
| **Palo Block 3-seater Sofa High Back with Armrests** | Autumn 221 | 94953 | 75 544 | 61 422 |
| **Palo Block 3-seater Sofa High Back with Armrests** | Autumn 361 | 94952 | 75 544 | 61 422 |
| **Palo Block 3-seater Sofa High Back with Armrests** | Beige | 31404 | 88 654 | 72 071 |
| **Palo Block 3-seater Sofa High Back with Armrests** | Pine | 31405 | 101 764 | 82 731 |
| **Palo Block 3-seater Sofa High Back with Armrests** | Sera Cobalt | 94947 | 101 764 | 82 731 |
| **Palo Block 3-seater Sofa High Back with Armrests** | Velluto Coex VL30 | 31928 | 105 789 | 86 009 |
| **Palo Block 3-seater Sofa Low Back** | Amdal 110 | 94913 | 70 369 | 57 213 |
| **Palo Block 3-seater Sofa Low Back** | Amdal 130 | 94914 | 70 369 | 57 213 |
| **Palo Block 3-seater Sofa Low Back** | Amdal 280 | 94915 | 70 369 | 57 213 |
| **Palo Block 3-seater Sofa Low Back** | Autumn 221 | 94891 | 60 249 | 48 979 |
| **Palo Block 3-seater Sofa Low Back** | Autumn 361 | 94890 | 60 249 | 48 979 |
| **Palo Block 3-seater Sofa Low Back** | Beige | 31406 | 70 369 | 57 213 |
| **Palo Block 3-seater Sofa Low Back** | Pine | 31407 | 80 489 | 65 435 |
| **Palo Block 3-seater Sofa Low Back** | Sera Cobalt | 94885 | 80 489 | 65 435 |
| **Palo Block 3-seater Sofa Low Back** | Velluto Coex VL30 | 31929 | 83 939 | 68 241 |
| **Palo Block 3-seater Sofa Low Back with Armrests** | Amdal 110 | 95099 | 76 924 | 62 537 |
| **Palo Block 3-seater Sofa Low Back with Armrests** | Amdal 130 | 95100 | 76 924 | 62 537 |
| **Palo Block 3-seater Sofa Low Back with Armrests** | Amdal 280 | 95101 | 76 924 | 62 537 |
| **Palo Block 3-seater Sofa Low Back with Armrests** | Autumn 221 | 95077 | 66 804 | 54 315 |
| **Palo Block 3-seater Sofa Low Back with Armrests** | Autumn 361 | 95076 | 66 804 | 54 315 |
| **Palo Block 3-seater Sofa Low Back with Armrests** | Beige | 31408 | 76 924 | 62 537 |
| **Palo Block 3-seater Sofa Low Back with Armrests** | Pine | 31409 | 87 044 | 70 771 |
| **Palo Block 3-seater Sofa Low Back with Armrests** | Sera Cobalt | 95071 | 87 044 | 70 771 |
| **Palo Block 3-seater Sofa Low Back with Armrests** | Velluto Coex VL30 | 31930 | 91 989 | 74 785 |
| **Palo Block 3-seater Sofa Medium Back** | Amdal 110 | 94851 | 79 224 | 64 412 |
| **Palo Block 3-seater Sofa Medium Back** | Amdal 130 | 94852 | 79 224 | 64 412 |
| **Palo Block 3-seater Sofa Medium Back** | Amdal 280 | 94853 | 79 224 | 64 412 |
| **Palo Block 3-seater Sofa Medium Back** | Autumn 221 | 94829 | 69 219 | 56 270 |
| **Palo Block 3-seater Sofa Medium Back** | Autumn 361 | 94828 | 69 219 | 56 270 |
| **Palo Block 3-seater Sofa Medium Back** | Beige | 31410 | 79 224 | 64 412 |
| **Palo Block 3-seater Sofa Medium Back** | Pine | 31411 | 89 229 | 72 542 |
| **Palo Block 3-seater Sofa Medium Back** | Sera Cobalt | 94823 | 89 229 | 72 542 |
| **Palo Block 3-seater Sofa Medium Back** | Velluto Coex VL30 | 31931 | 91 989 | 74 785 |
| **Palo Block 3-seater Sofa Medium Back with Armrests** | Amdal 110 | 95037 | 85 779 | 69 736 |
| **Palo Block 3-seater Sofa Medium Back with Armrests** | Amdal 130 | 95038 | 85 779 | 69 736 |
| **Palo Block 3-seater Sofa Medium Back with Armrests** | Amdal 280 | 95039 | 85 779 | 69 736 |
| **Palo Block 3-seater Sofa Medium Back with Armrests** | Autumn 221 | 95015 | 75 659 | 61 514 |
| **Palo Block 3-seater Sofa Medium Back with Armrests** | Autumn 361 | 95014 | 75 659 | 61 514 |
| **Palo Block 3-seater Sofa Medium Back with Armrests** | Beige | 31412 | 85 779 | 69 736 |
| **Palo Block 3-seater Sofa Medium Back with Armrests** | Pine | 31413 | 95 899 | 77 970 |
| **Palo Block 3-seater Sofa Medium Back with Armrests** | Sera Cobalt | 95009 | 95 899 | 77 970 |
| **Palo Block 3-seater Sofa Medium Back with Armrests** | Velluto Coex VL30 | 31932 | 103 489 | 84 134 |
| **Palo Block Ottoman** | Amdal 110 | 95347 | 11 144 | 9 062 |
| **Palo Block Ottoman** | Amdal 130 | 95348 | 11 144 | 9 062 |
| **Palo Block Ottoman** | Amdal 280 | 95349 | 11 144 | 9 062 |
| **Palo Block Ottoman** | Autumn 221 | 95325 | 9 879 | 8 027 |
| **Palo Block Ottoman** | Autumn 361 | 95324 | 9 879 | 8 027 |
| **Palo Block Ottoman** | Beige | 31421 | 11 144 | 9 062 |
| **Palo Block Ottoman** | Pine | 31422 | 12 409 | 10 086 |
| **Palo Block Ottoman** | Sera Cobalt | 95319 | 12 409 | 10 086 |
| **Palo Block Ottoman** | Velluto Coex VL30 | 31933 | 13 674 | 11 121 |
| **Palo Block Single-seater High Back** | Amdal 110 | 95161 | 36 444 | 29 624 |
| **Palo Block Single-seater High Back** | Amdal 130 | 95162 | 36 444 | 29 624 |
| **Palo Block Single-seater High Back** | Amdal 280 | 95163 | 36 444 | 29 624 |
| **Palo Block Single-seater High Back** | Autumn 221 | 95139 | 29 774 | 24 208 |
| **Palo Block Single-seater High Back** | Autumn 361 | 95138 | 29 774 | 24 208 |
| **Palo Block Single-seater High Back** | Beige | 31414 | 36 444 | 29 624 |
| **Palo Block Single-seater High Back** | Pine | 31415 | 43 114 | 35 052 |
| **Palo Block Single-seater High Back** | Sera Cobalt | 95133 | 43 114 | 35 052 |
| **Palo Block Single-seater High Back** | Velluto Coex VL30 | 31934 | 47 139 | 38 330 |

# Palo Block — Price List

| Product name | Finish | SKU | Retail Price SEK | List Price SEK (ex VAT) |
|---|---|---|---|---|
| **Curated Collection** | | | | |
| **Palo Block Single-seater Low Back** | Amdal 110 | 95285 | 29 314 | 23 828 |
| **Palo Block Single-seater Low Back** | Amdal 130 | 95286 | 29 314 | 23 828 |
| **Palo Block Single-seater Low Back** | Amdal 280 | 95287 | 29 314 | 23 828 |
| **Palo Block Single-seater Low Back** | Autumn 221 | 95263 | 24 369 | 19 815 |
| **Palo Block Single-seater Low Back** | Autumn 361 | 95262 | 24 369 | 19 815 |
| **Palo Block Single-seater Low Back** | Beige | 31416 | 29 314 | 23 828 |
| **Palo Block Single-seater Low Back** | Pine | 31417 | 34 259 | 27 853 |
| **Palo Block Single-seater Low Back** | Sera Cobalt | 95257 | 34 259 | 27 853 |
| **Palo Block Single-seater Low Back** | Velluto Coex VL30 | 31935 | 36 789 | 29 912 |
| **Palo Block Single-seater Medium Back** | Amdal 110 | 95223 | 34 604 | 28 129 |
| **Palo Block Single-seater Medium Back** | Amdal 130 | 95224 | 34 604 | 28 129 |
| **Palo Block Single-seater Medium Back** | Amdal 280 | 95225 | 34 604 | 28 129 |
| **Palo Block Single-seater Medium Back** | Autumn 221 | 95201 | 29 659 | 24 116 |
| **Palo Block Single-seater Medium Back** | Autumn 361 | 95200 | 29 659 | 24 116 |
| **Palo Block Single-seater Medium Back** | Beige | 31418 | 34 604 | 28 129 |
| **Palo Block Single-seater Medium Back** | Pine | 31419 | 39 549 | 32 154 |
| **Palo Block Single-seater Medium Back** | Sera Cobalt | 95195 | 39 549 | 32 154 |
| **Palo Block Single-seater Medium Back** | Velluto Coex VL30 | 31936 | 44 494 | 36 179 |
| **Graded-in Textile*** | | | | |
| **Palo Block 2-seater Sofa High Back** | Grade 1 | | 57 144 | 46 460 |
| **Palo Block 2-seater Sofa High Back** | Grade 2 | | 64 964 | 52 820 |
| **Palo Block 2-seater Sofa High Back** | Grade 3 | | 70 254 | 57 121 |
| **Palo Block 2-seater Sofa High Back** | Grade 4 | | 75 659 | 61 514 |
| **Palo Block 2-seater Sofa High Back** | Grade 5 | | 83 364 | 67 770 |
| **Palo Block 2-seater Sofa High Back** | Grade 6 | | 93 714 | 76 188 |
| **Palo Block 2-seater Sofa High Back with Armrests** | Grade 1 | | 62 319 | 50 669 |
| **Palo Block 2-seater Sofa High Back with Armrests** | Grade 2 | | 71 059 | 57 776 |
| **Palo Block 2-seater Sofa High Back with Armrests** | Grade 3 | | 77 269 | 62 825 |
| **Palo Block 2-seater Sofa High Back with Armrests** | Grade 4 | | 83 364 | 67 770 |
| **Palo Block 2-seater Sofa High Back with Armrests** | Grade 5 | | 92 104 | 74 877 |
| **Palo Block 2-seater Sofa High Back with Armrests** | Grade 6 | | 104 064 | 84 606 |
| **Palo Block 2-seater Sofa Low Back** | Grade 1 | | 49 209 | 40 009 |
| **Palo Block 2-seater Sofa Low Back** | Grade 2 | | 54 729 | 44 494 |
| **Palo Block 2-seater Sofa Low Back** | Grade 3 | | 58 639 | 47 679 |
| **Palo Block 2-seater Sofa Low Back** | Grade 4 | | 62 434 | 50 761 |
| **Palo Block 2-seater Sofa Low Back** | Grade 5 | | 67 954 | 55 246 |
| **Palo Block 2-seater Sofa Low Back** | Grade 6 | | 75 314 | 61 226 |
| **Palo Block 2-seater Sofa Low Back with Armrests** | Grade 1 | | 54 384 | 44 218 |
| **Palo Block 2-seater Sofa Low Back with Armrests** | Grade 2 | | 60 939 | 49 542 |
| **Palo Block 2-seater Sofa Low Back with Armrests** | Grade 3 | | 65 539 | 53 280 |
| **Palo Block 2-seater Sofa Low Back with Armrests** | Grade 4 | | 70 139 | 57 029 |
| **Palo Block 2-seater Sofa Low Back with Armrests** | Grade 5 | | 76 809 | 62 445 |
| **Palo Block 2-seater Sofa Low Back with Armrests** | Grade 6 | | 85 664 | 69 644 |
| **Palo Block 2-seater Sofa Medium Back** | Grade 1 | | 55 764 | 45 333 |
| **Palo Block 2-seater Sofa Medium Back** | Grade 2 | | 61 974 | 50 382 |
| **Palo Block 2-seater Sofa Medium Back** | Grade 3 | | 66 344 | 53 935 |
| **Palo Block 2-seater Sofa Medium Back** | Grade 4 | | 70 599 | 57 397 |
| **Palo Block 2-seater Sofa Medium Back** | Grade 5 | | 76 924 | 62 537 |
| **Palo Block 2-seater Sofa Medium Back** | Grade 6 | | 85 319 | 69 368 |
| **Palo Block 2-seater Sofa Medium Back with Armrests** | Grade 1 | | 60 134 | 48 887 |
| **Palo Block 2-seater Sofa Medium Back with Armrests** | Grade 2 | | 67 494 | 54 878 |
| **Palo Block 2-seater Sofa Medium Back with Armrests** | Grade 3 | | 72 554 | 58 984 |
| **Palo Block 2-seater Sofa Medium Back with Armrests** | Grade 4 | | 77 614 | 63 101 |
| **Palo Block 2-seater Sofa Medium Back with Armrests** | Grade 5 | | 84 974 | 69 081 |
| **Palo Block 2-seater Sofa Medium Back with Armrests** | Grade 6 | | 94 864 | 77 131 |

*Please make sure to check pro.hem.com for the most up to date information on finishes and stock availability.

# Palo Block — Price List

| Product name | Finish | SKU | Retail Price SEK | List Price SEK (ex VAT) |
|---|---|---|---|---|
| **Graded-in Textile*** | | | | |
| **Palo Block 3-seater Sofa High Back** | Grade 1 | | 79 684 | 64 780 |
| **Palo Block 3-seater Sofa High Back** | Grade 2 | | 89 689 | 72 922 |
| **Palo Block 3-seater Sofa High Back** | Grade 3 | | 96 589 | 78 522 |
| **Palo Block 3-seater Sofa High Back** | Grade 4 | | 103 374 | 84 042 |
| **Palo Block 3-seater Sofa High Back** | Grade 5 | | 113 379 | 92 173 |
| **Palo Block 3-seater Sofa High Back** | Grade 6 | | 126 719 | 103 029 |
| **Palo Block 3-seater Sofa High Back with Armrests** | Grade 1 | | 83 939 | 68 241 |
| **Palo Block 3-seater Sofa High Back with Armrests** | Grade 2 | | 95 324 | 77 499 |
| **Palo Block 3-seater Sofa High Back with Armrests** | Grade 3 | | 103 259 | 83 950 |
| **Palo Block 3-seater Sofa High Back with Armrests** | Grade 4 | | 111 079 | 90 310 |
| **Palo Block 3-seater Sofa High Back with Armrests** | Grade 5 | | 122 464 | 99 567 |
| **Palo Block 3-seater Sofa High Back with Armrests** | Grade 6 | | 137 874 | 112 091 |
| **Palo Block 3-seater Sofa Low Back** | Grade 1 | | 69 679 | 56 649 |
| **Palo Block 3-seater Sofa Low Back** | Grade 2 | | 77 039 | 62 629 |
| **Palo Block 3-seater Sofa Low Back** | Grade 3 | | 82 214 | 66 838 |
| **Palo Block 3-seater Sofa Low Back** | Grade 4 | | 87 274 | 70 955 |
| **Palo Block 3-seater Sofa Low Back** | Grade 5 | | 94 634 | 76 935 |
| **Palo Block 3-seater Sofa Low Back** | Grade 6 | | 104 524 | 84 974 |
| **Palo Block 3-seater Sofa Low Back with Armrests** | Grade 1 | | 73 934 | 60 111 |
| **Palo Block 3-seater Sofa Low Back with Armrests** | Grade 2 | | 82 674 | 67 218 |
| **Palo Block 3-seater Sofa Low Back with Armrests** | Grade 3 | | 88 884 | 72 266 |
| **Palo Block 3-seater Sofa Low Back with Armrests** | Grade 4 | | 94 979 | 77 223 |
| **Palo Block 3-seater Sofa Low Back with Armrests** | Grade 5 | | 103 719 | 84 330 |
| **Palo Block 3-seater Sofa Low Back with Armrests** | Grade 6 | | 115 679 | 94 047 |
| **Palo Block 3-seater Sofa Medium Back** | Grade 1 | | 77 269 | 62 825 |
| **Palo Block 3-seater Sofa Medium Back** | Grade 2 | | 85 319 | 69 368 |
| **Palo Block 3-seater Sofa Medium Back** | Grade 3 | | 90 954 | 73 945 |
| **Palo Block 3-seater Sofa Medium Back** | Grade 4 | | 96 474 | 78 430 |
| **Palo Block 3-seater Sofa Medium Back** | Grade 5 | | 104 639 | 85 077 |
| **Palo Block 3-seater Sofa Medium Back** | Grade 6 | | 115 449 | 93 863 |
| **Palo Block 3-seater Sofa Medium Back with Armrests** | Grade 1 | | 81 409 | 66 183 |
| **Palo Block 3-seater Sofa Medium Back with Armrests** | Grade 2 | | 90 954 | 73 945 |
| **Palo Block 3-seater Sofa Medium Back with Armrests** | Grade 3 | | 97 624 | 79 373 |
| **Palo Block 3-seater Sofa Medium Back with Armrests** | Grade 4 | | 104 179 | 84 698 |
| **Palo Block 3-seater Sofa Medium Back with Armrests** | Grade 5 | | 113 724 | 92 460 |
| **Palo Block 3-seater Sofa Medium Back with Armrests** | Grade 6 | | 126 604 | 102 925 |
| **Palo Block Ottoman** | Grade 1 | | 11 604 | 9 430 |
| **Palo Block Ottoman** | Grade 2 | | 13 099 | 10 649 |
| **Palo Block Ottoman** | Grade 3 | | 14 134 | 11 489 |
| **Palo Block Ottoman** | Grade 4 | | 15 169 | 12 328 |
| **Palo Block Ottoman** | Grade 5 | | 16 664 | 13 547 |
| **Palo Block Ottoman** | Grade 6 | | 18 619 | 15 134 |
| **Palo Block Single-seater High Back** | Grade 1 | | 34 604 | 28 129 |
| **Palo Block Single-seater High Back** | Grade 2 | | 40 124 | 32 626 |
| **Palo Block Single-seater High Back** | Grade 3 | | 43 919 | 35 708 |
| **Palo Block Single-seater High Back** | Grade 4 | | 47 829 | 38 882 |
| **Palo Block Single-seater High Back** | Grade 5 | | 53 349 | 43 378 |
| **Palo Block Single-seater High Back** | Grade 6 | | 60 709 | 49 358 |
| **Palo Block Single-seater Low Back** | Grade 1 | | 28 624 | 23 276 |
| **Palo Block Single-seater Low Back** | Grade 2 | | 32 649 | 26 542 |
| **Palo Block Single-seater Low Back** | Grade 3 | | 35 409 | 28 785 |
| **Palo Block Single-seater Low Back** | Grade 4 | | 38 284 | 31 131 |
| **Palo Block Single-seater Low Back** | Grade 5 | | 42 309 | 34 397 |
| **Palo Block Single-seater Low Back** | Grade 6 | | 47 714 | 38 790 |
| **Palo Block Single-seater Medium Back** | Grade 1 | | 34 144 | 27 761 |
| **Palo Block Single-seater Medium Back** | Grade 2 | | 39 319 | 31 970 |
| **Palo Block Single-seater Medium Back** | Grade 3 | | 42 884 | 34 868 |
| **Palo Block Single-seater Medium Back** | Grade 4 | | 46 449 | 37 766 |
| **Palo Block Single-seater Medium Back** | Grade 5 | | 51 509 | 41 872 |
| **Palo Block Single-seater Medium Back** | Grade 6 | | 58 524 | 47 576 |



*Please make sure to check pro.hem.com for the most up to date information on finishes and stock availability.

# Palo Side Table

*Design by Hem Design Studio*

Palo Side Table is the perfect extension to your Palo Sofa, Lounger, Single-Seater or Ottoman. A resting spot for coffee cup, laptop or notebook, it's a great addition to any environment. Attach it to your Palo by replacing an existing leg or insert it in an available slot in the sofa base. Available for all Palo variant colors in Black, Chalk, Grey and Blue.

| Product name | Finish | SKU |
|---|---|---|
| **Palo Side Table** | Blue | 30288 |
| | Chalk | 30289 |
| | Grey | 30290 |
| | Black | 30291 |

**Material**
*Steel*
Powder Coated

**Country of origin**
Poland

**Tests & certifications**
EN 16139:2013 – L2: Extreme use – Furniture – Strength, durability and safety – Requirements for non-domestic seating

**3D model**
3D files of all products are available on the product pages on hem.com

**Product accessory**
Palo Sofa

**Always in stock**
We keep all our products in stock and ready to ship from our warehouses in the US and EU

**Blue (RAL 5011)**
*Powder Coated Steel*

**Chalk (RAL 9010)**
*Powder Coated Steel*

**Grey (RAL 7035)**
*Powder Coated Steel*

**Black (RAL 9005)**
*Powder Coated Steel*

**Samples**
We supply samples of all our material finishes, order them directly from hem.com/samples

**Palo Side Table**

Top view

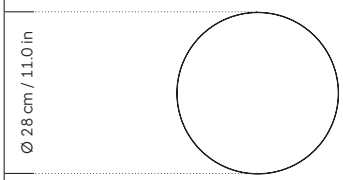


Top view

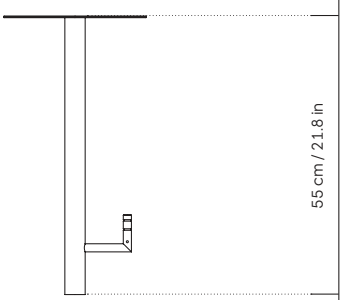

# Palo 2-Seater Sofa with Armrests

*Design by Hem*

Palo is whatever you want it to be; a chaise, an ottoman, a sofa. This is furniture that evolves and grows with you. Elegant wood and metal legs are a hallmark of the architectural Palo family; as well as providing detail, they are the secret to a modular system that allows cushions and armrests to be moved and repositioned across the whole series. It doesn't end there... Want a side table for your tea? Or need to replace an individual element? Our approach enables you to update and grow your system, adapting to whatever life brings.

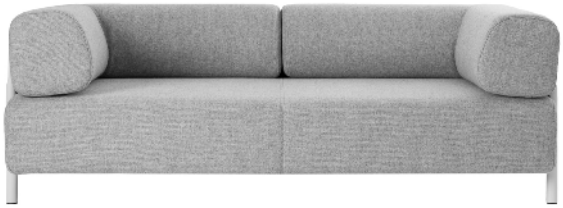

**Upholstery**
*Amdal*
by GU (Norway)
70% Virgin Wool, 30% Viscose
100,000 Martindale
Pilling 4
Lightfastness 5-7
Flame resistance EN 1021: Part 1 & 2, BS 5852: Part 1 & 2 (Crib 5), US Cal. TB 117

*Sera*
by Rohi (Germany)
94% Virgin Wool, 6% Polyamide
122,000 Martindale
Pilling 4-5
Lightfastness 5-8
Flame resistance EN 1021: Part 1 & 2, BS 5852: Part 1 & 2 (Crib 5), US Cal. TB 117

*Bute Storr*
by Bute Fabrics (Scotland)
97% Pure New Wool, 3% Nylon
65,000 Martindale
Lightfastness 5 (BS EN ISO 105 – B02)
Flame resistance IMO FTP Code(2010) Annex 1, Part 8, BS 5852: PART 1 & 2 (Crib 5), US Cal. TB 117

*Autumn*
by Kvadrat (Denmark)
100% Recycled Polyester
50,000 Martindale
Pilling 4-5
Lightfastness 6-7
Flame resistance ASTM E 84 Adhered, ASTM E84 Class A Unadhered, EN 1021: Part 1 & 2, IMO 2010 FTP Code Part 8, US Cal. TB 117-2013

*Velluto Coex*
by Chioccarello (Italy)
100% Cotton
65,000 Martindale
Pilling 4-5
Lightfastness 5
Flame resistance IMO, 1 IM UNI 9175, EN 1021-1:2006, EN 1021-2:2006, CRIB 5, TB 117:2013

**Leg material**
*Beech wood*
Painted

*Steel*
Powder coated

**Inside material**
PU foam
Wooden structure

**Country of origin**
Lithuania

**3D model**
3D files of all products are available on the product pages on hem.com

**Product accessory**
Palo Side Table

**Tests & certifications**
EN 16139:2013 – L2: Extreme use – Furniture – Strength, durability and safety – Requirements for non-domestic seating

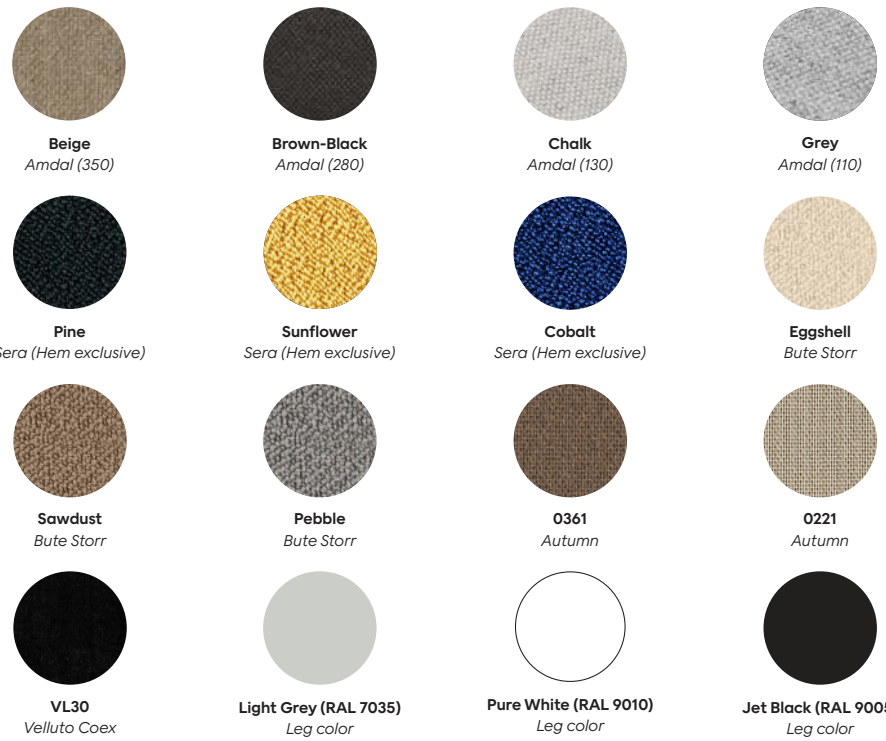


**Modularity**
This is a modular product that can be configured freely to fit your needs. Reach out to info@hem.com for assistance

**Samples**
We supply samples of our material finishes. You can order them directly from hem.com/samples

**Graded-in Textile and Made-To-Order**
Reach out to your local representative for the full selection of made-to-order options.

**Palo 2-seater Sofa with Armrests**

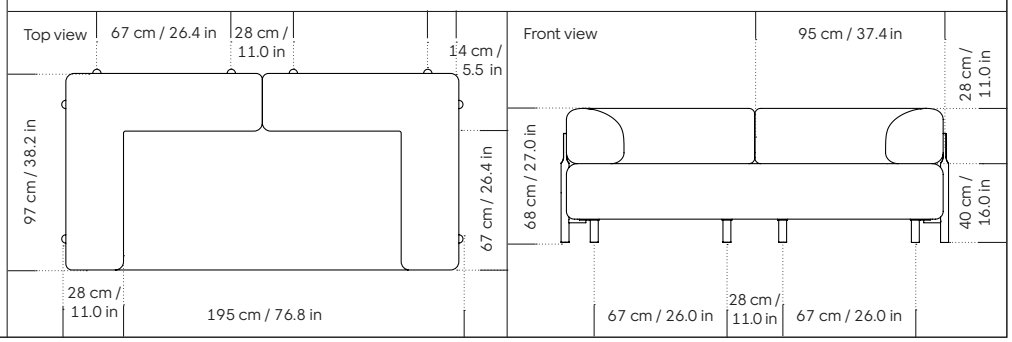

# Palo 2-Seater Sofa

*Design by Hem*

Palo is whatever you want it to be; a chaise, an ottoman, a sofa. This is furniture that evolves and grows with you. Elegant wood and metal legs are a hallmark of the architectural Palo family; as well as providing detail, they are the secret to a modular system that allows cushions and armrests to be moved and repositioned across the whole series. It doesn't end there... Want a side table for your tea? Or need to replace an individual element? Our approach enables you to update and grow your system, adapting to whatever life brings.

**Upholstery**
*Amdal*
by GU (Norway)
70% Virgin Wool, 30% Viscose
100,000 Martindale
Pilling 4
Lightfastness 5-7
Flame resistance EN 1021: Part 1 & 2, BS 5852: Part 1 & 2 (Crib 5), US Cal. TB 117

*Sera*
by Rohi (Germany)
94% Virgin Wool, 6% Polyamide
122,000 Martindale
Pilling 4-5
Lightfastness 5-8
Flame resistance EN 1021: Part 1 & 2, BS 5852: Part 1 & 2 (Crib 5), US Cal. TB 117

*Bute Storr*
by Bute Fabrics (Scotland)
97% Pure New Wool, 3% Nylon
65,000 Martindale
Lightfastness 5 (BS EN ISO 105 – B02)
Flame resistance IMO FTP Code(2010) Annex 1, Part 8, BS 5852: PART 1 & 2 (Crib 5), US Cal. TB 117

*Autumn*
by Kvadrat (Denmark)
100% Recycled Polyester
50,000 Martindale
Pilling 4-5
Lightfastness 6-7
Flame resistance ASTM E 84 Adhered, ASTM E84 Class A Unadhered, EN 1021: Part 1 & 2, IMO 2010 FTP Code Part 8, US Cal. TB 117-2013

*Velluto Coex*
by Chioccarello (Italy)
100% Cotton
65,000 Martindale
Pilling 4-5
Lightfastness 5
Flame resistance IMO, 1 IM UNI 9175, EN 1021-1:2006, EN 1021-2:2006, CRIB 5, TB 117:2013

**Leg material**
*Beech wood*
Painted

*Steel*
Powder coated

**Inside material**
PU foam
Wooden structure

**Country of origin**
Lithuania

**3D model**
3D files of all products are available on the product pages on hem.com

**Product accessory**
Palo Side Table

**Tests & certifications**
EN 16139:2013 – L2: Extreme use – Furniture – Strength, durability and safety – Requirements for non-domestic seating

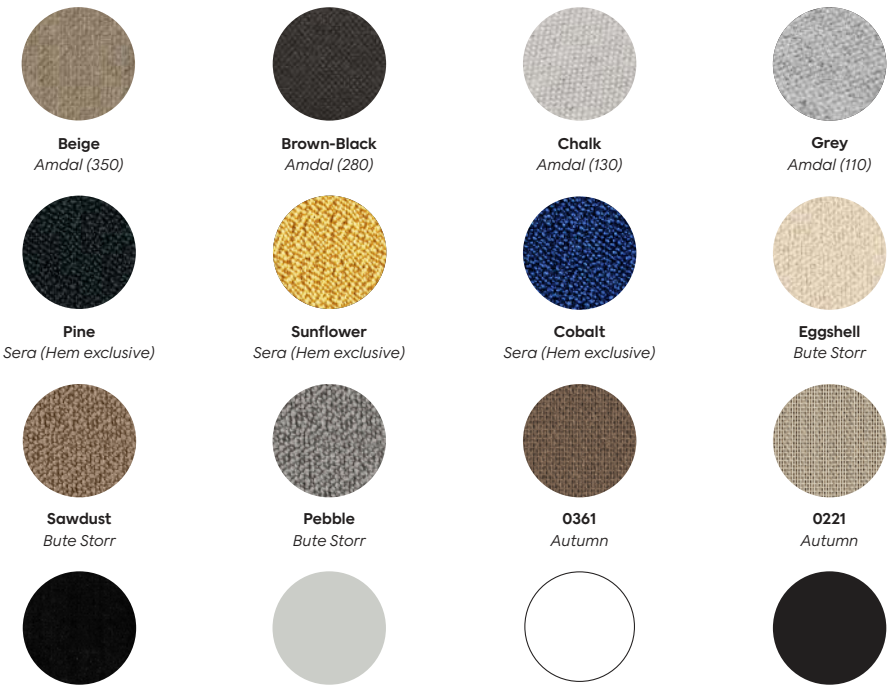


**Modularity**
This is a modular product that can be configured freely to fit your needs. Reach out to info@hem.com for assistance

**Samples**
We supply samples of our material finishes. You can order them directly from hem.com/samples

**Graded-in Textile and Made-To-Order**
Reach out to your local representative for the full selection of made-to-order options.

**Palo 2-seater Sofa**

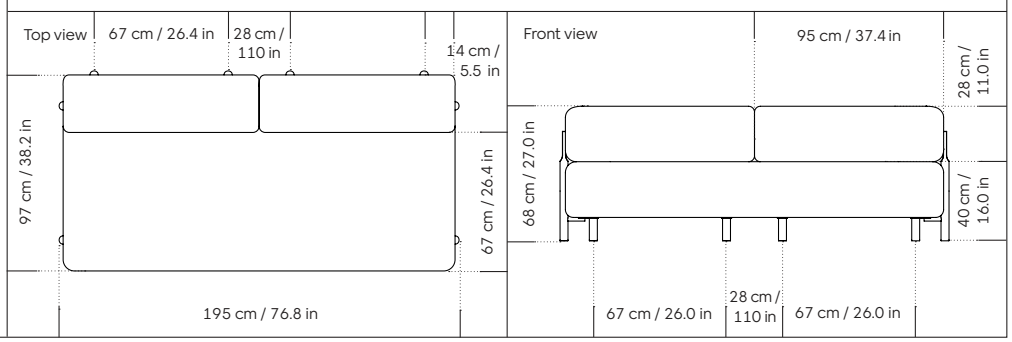

# Palo Corner Sofa

*Design by Hem*

Palo is whatever you want it to be; a chaise, an ottoman, a sofa. This is furniture that evolves and grows with you. Elegant wood and metal legs are a hallmark of the architectural Palo family; as well as providing detail, they are the secret to a modular system that allows cushions and armrests to be moved and repositioned across the whole series. It doesn't end there... Want a side table for your tea? Or need to replace an individual element? Our approach enables you to update and grow your system, adapting to whatever life brings.

**Upholstery**
*Amdal*
by GU (Norway)
70% Virgin Wool, 30% Viscose
100,000 Martindale
Pilling 4
Lightfastness 5-7
Flame resistance EN 1021: Part 1 & 2, BS 5852: Part 1 & 2 (Crib 5), US Cal. TB 117

*Sera*
by Rohi (Germany)
94% Virgin Wool, 6% Polyamide
122,000 Martindale
Pilling 4-5
Lightfastness 5-8
Flame resistance EN 1021: Part 1 & 2, BS 5852: Part 1 & 2 (Crib 5), US Cal. TB 117

*Bute Storr*
by Bute Fabrics (Scotland)
97% Pure New Wool, 3% Nylon
65,000 Martindale
Lightfastness 5 (BS EN ISO 105 – B02)
Flame resistance IMO FTP Code(2010) Annex 1, Part 8, BS 5852: PART 1 & 2 (Crib 5), US Cal. TB 117

*Autumn*
by Kvadrat (Denmark)
100% Recycled Polyester
50,000 Martindale
Pilling 4-5
Lightfastness 6-7
Flame resistance ASTM E 84 Adhered, ASTM E84 Class A Unadhered, EN 1021: Part 1 & 2, IMO 2010 FTP Code Part 8, US Cal. TB 117-2013

*Velluto Coex*
by Chioccarello (Italy)
100% Cotton
65,000 Martindale
Pilling 4-5
Lightfastness 5
Flame resistance IMO, 1 IM UNI 9175, EN 1021-1:2006, EN 1021-2:2006, CRIB 5, TB 117:2013

**Leg material**
*Beech wood*
Painted

*Steel*
Powder coated

**Inside material**
PU foam
Wooden structure

**Country of origin**
Lithuania

**3D model**
3D files of all products are available on the product pages on hem.com

**Product accessory**
Palo Side Table

**Tests & certifications**
EN 16139:2013 – L2: Extreme use – Furniture – Strength, durability and safety – Requirements for non-domestic seating

**Beige**
*Amdal (350)*

**Brown-Black**
*Amdal (280)*

**Chalk**
*Amdal (130)*

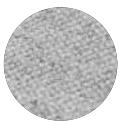
**Grey**
*Amdal (110)*

**Pine**
*Sera (Hem exclusive)*

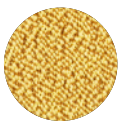
**Sunflower**
*Sera (Hem exclusive)*

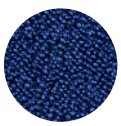
**Cobalt**
*Sera (Hem exclusive)*

**Eggshell**
*Bute Storr*

**Sawdust**
*Bute Storr*

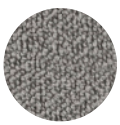
**Pebble**
*Bute Storr*

**0361**
*Autumn*

**0221**
*Autumn*

**VL30**
*Velluto Coex*


**Light Grey (RAL 7035)**
*Leg color*

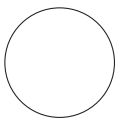
**Pure White (RAL 9010)**
*Leg color*

**Jet Black (RAL 9005)**
*Leg color*

**Modularity**
This is a modular product that can be configured freely to fit your needs. Reach out to info@hem.com for assistance

**Samples**
We supply samples of our material finishes. You can order them directly from hem.com/samples

**Graded-in Textile and Made-To-Order**
Reach out to your local representative for the full selection of made-to-order options.

**Palo Corner Sofa**

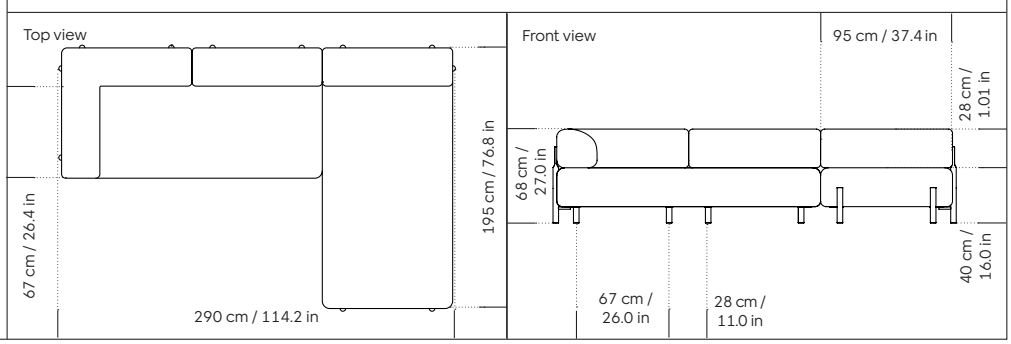

# Palo Lounger

*Design by Hem*

Palo is whatever you want it to be; a chaise, an ottoman, a sofa. This is furniture that evolves and grows with you. Elegant wood and metal legs are a hallmark of the architectural Palo family; as well as providing detail, they are the secret to a modular system that allows cushions and armrests to be moved and repositioned across the whole series. It doesn't end there... Want a side table for your tea? Or need to replace an individual element? Our approach enables you to update and grow your system, adapting to whatever life brings.

**Upholstery**
*Amdal*
by GU (Norway)
70% Virgin Wool, 30% Viscose
100,000 Martindale
Pilling 4
Lightfastness 5-7
Flame resistance EN 1021: Part 1 & 2, BS 5852: Part 1 & 2 (Crib 5), US Cal. TB 117

*Sera*
by Rohi (Germany)
94% Virgin Wool, 6% Polyamide
122,000 Martindale
Pilling 4-5
Lightfastness 5-8
Flame resistance EN 1021: Part 1 & 2, BS 5852: Part 1 & 2 (Crib 5), US Cal. TB 117

*Bute Storr*
by Bute Fabrics (Scotland)
97% Pure New Wool, 3% Nylon
65,000 Martindale
Lightfastness 5 (BS EN ISO 105 – B02)
Flame resistance IMO FTP Code(2010) Annex 1, Part 8, BS 5852: PART 1 & 2 (Crib 5), US Cal. TB 117

*Autumn*
by Kvadrat (Denmark)
100% Recycled Polyester
50,000 Martindale
Pilling 4-5
Lightfastness 6-7
Flame resistance ASTM E 84 Adhered, ASTM E84 Class A Unadhered, EN 1021: Part 1 & 2, IMO 2010 FTP Code Part 8, US Cal. TB 117-2013

*Velluto Coex*
by Chioccarello (Italy)
100% Cotton
65,000 Martindale
Pilling 4-5
Lightfastness 5
Flame resistance IMO, 1 IM UNI 9175, EN 1021-1:2006, EN 1021-2:2006, CRIB 5, TB 117:2013

**Leg material**
*Beech wood*
Painted

*Steel*
Powder coated

**Inside material**
PU foam
Wooden structure

**Country of origin**
Lithuania

**3D model**
3D files of all products are available on the product pages on hem.com

**Product accessory**
Palo Side Table

**Tests & certifications**
EN 16139:2013 – L2: Extreme use – Furniture – Strength, durability and safety – Requirements for non-domestic seating

**Beige**
*Amdal (350)*

**Brown-Black**
*Amdal (280)*

**Chalk**
*Amdal (130)*

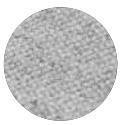

**Grey**
*Amdal (110)*

**Pine**
*Sera (Hem exclusive)*

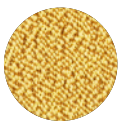

**Sunflower**
*Sera (Hem exclusive)*

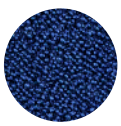

**Cobalt**
*Sera (Hem exclusive)*

**Eggshell**
*Bute Storr*

**Sawdust**
*Bute Storr*

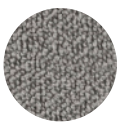

**Pebble**
*Bute Storr*

**0361**
*Autumn*

**0221**
*Autumn*

**VL30**
*Velluto Coex*



**Light Grey (RAL 7035)**
*Leg color*

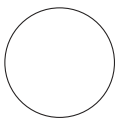

**Pure White (RAL 9010)**
*Leg color*

**Jet Black (RAL 9005)**
*Leg color*

**Modularity**
This is a modular product that can be configured freely to fit your needs. Reach out to info@hem.com for assistance

**Samples**
We supply samples of our material finishes. You can order them directly from hem.com/samples

**Graded-in Textile and Made-To-Order**
Reach out to your local representative for the full selection of made-to-order options.

**Palo Lounger Sofa**

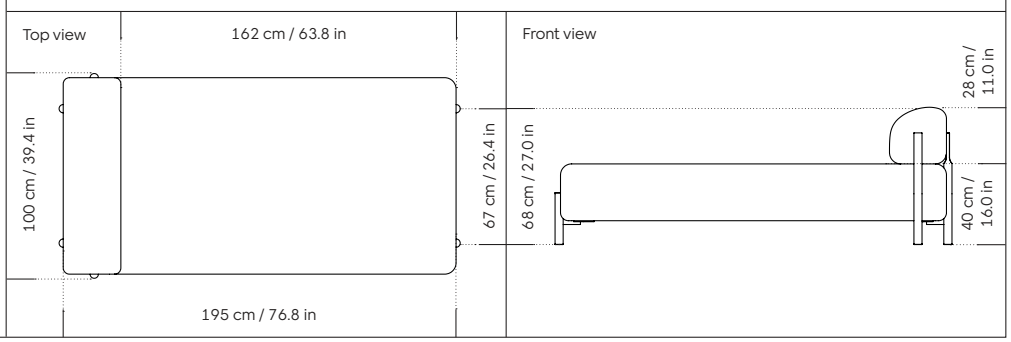

# Palo 2-seater Sofa Chaise

*Design by Hem*

Palo is whatever you want it to be; a chaise, an ottoman, a sofa. This is furniture that evolves and grows with you. Elegant wood and metal legs are a hallmark of the architectural Palo family; as well as providing detail, they are the secret to a modular system that allows cushions and armrests to be moved and repositioned across the whole series. It doesn't end there... Want a side table for your tea? Or need to replace an individual element? Our approach enables you to update and grow your system, adapting to whatever life brings.

**Upholstery**
*Amdal*
by GU (Norway)
70% Virgin Wool, 30% Viscose
100,000 Martindale
Pilling 4
Lightfastness 5-7
Flame resistance EN 1021: Part 1 & 2, BS 5852: Part 1 & 2 (Crib 5), US Cal. TB 117

*Sera*
by Rohi (Germany)
94% Virgin Wool, 6% Polyamide
122,000 Martindale
Pilling 4-5
Lightfastness 5-8
Flame resistance EN 1021: Part 1 & 2, BS 5852: Part 1 & 2 (Crib 5), US Cal. TB 117

*Bute Storr*
by Bute Fabrics (Scotland)
97% Pure New Wool, 3% Nylon
65,000 Martindale
Lightfastness 5 (BS EN ISO 105 – B02)
Flame resistance IMO FTP Code(2010) Annex 1, Part 8, BS 5852: PART 1 & 2 (Crib 5), US Cal. TB 117

*Autumn*
by Kvadrat (Denmark)
100% Recycled Polyester
50,000 Martindale
Pilling 4-5
Lightfastness 6-7
Flame resistance ASTM E 84 Adhered, ASTM E84 Class A Unadhered, EN 1021: Part 1 & 2, IMO 2010 FTP Code Part 8, US Cal. TB 117-2013

*Velluto Coex*
by Chioccarello (Italy)
100% Cotton
65,000 Martindale
Pilling 4-5
Lightfastness 5
Flame resistance IMO, 1 IM UNI 9175, EN 1021-1:2006, EN 1021-2:2006, CRIB 5, TB 117:2013

**Leg material**
*Beech wood*
Painted

*Steel*
Powder coated

**Inside material**
PU foam
Wooden structure

**Country of origin**
Lithuania

**3D model**
3D files of all products are available on the product pages on hem.com

**Product accessory**
Palo Side Table

**Tests & certifications**
EN 16139:2013 – L2: Extreme use – Furniture – Strength, durability and safety – Requirements for non-domestic seating

**Beige**
*Amdal (350)*

**Brown-Black**
*Amdal (280)*

**Chalk**
*Amdal (130)*

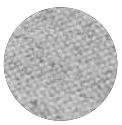

**Grey**
*Amdal (110)*

**Pine**
*Sera (Hem exclusive)*

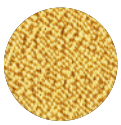

**Sunflower**
*Sera (Hem exclusive)*

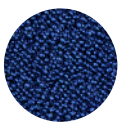

**Cobalt**
*Sera (Hem exclusive)*

**Eggshell**
*Bute Storr*

**Sawdust**
*Bute Storr*

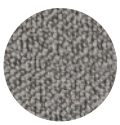

**Pebble**
*Bute Storr*

**0361**
*Autumn*

**0221**
*Autumn*

**VL30**
*Velluto Coex*



**Light Grey (RAL 7035)**
*Leg color*

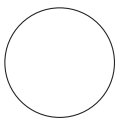

**Pure White (RAL 9010)**
*Leg color*

**Jet Black (RAL 9005)**
*Leg color*

**Modularity**
This is a modular product that can be configured freely to fit your needs. Reach out to info@hem.com for assistance

**Samples**
We supply samples of our material finishes. You can order them directly from hem.com/samples

**Graded-in Textile and Made-To-Order**
Reach out to your local representative for the full selection of made-to-order options.

**Palo 2-seater Chaise Sofa**

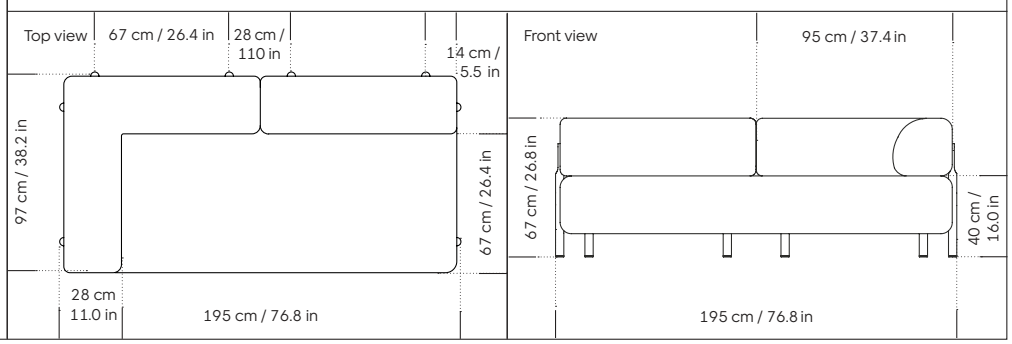

# Palo Single-Seater

*Design by Hem*

Palo is whatever you want it to be; a chaise, an ottoman, a sofa. This is furniture that evolves and grows with you. Elegant wood and metal legs are a hallmark of the architectural Palo family; as well as providing detail, they are the secret to a modular system that allows cushions and armrests to be moved and repositioned across the whole series. It doesn't end there... Want a side table for your tea? Or need to replace an individual element? Our approach enables you to update and grow your system, adapting to whatever life brings.

**Upholstery**
*Amdal*
by GU (Norway)
70% Virgin Wool, 30% Viscose
100,000 Martindale
Pilling 4
Lightfastness 5-7
Flame resistance EN 1021: Part 1 & 2, BS 5852: Part 1 & 2 (Crib 5), US Cal. TB 117

*Sera*
by Rohi (Germany)
94% Virgin Wool, 6% Polyamide
122,000 Martindale
Pilling 4-5
Lightfastness 5-8
Flame resistance EN 1021: Part 1 & 2, BS 5852: Part 1 & 2 (Crib 5), US Cal. TB 117

*Bute Storr*
by Bute Fabrics (Scotland)
97% Pure New Wool, 3% Nylon
65,000 Martindale
Lightfastness 5 (BS EN ISO 105 – B02)
Flame resistance IMO FTP Code(2010) Annex 1, Part 8, BS 5852: PART 1 & 2 (Crib 5), US Cal. TB 117

*Autumn*
by Kvadrat (Denmark)
100% Recycled Polyester
50,000 Martindale
Pilling 4-5
Lightfastness 6-7
Flame resistance ASTM E 84 Adhered, ASTM E84 Class A Unadhered, EN 1021: Part 1 & 2, IMO 2010 FTP Code Part 8, US Cal. TB 117-2013

*Velluto Coex*
by Chioccarello (Italy)
100% Cotton
65,000 Martindale
Pilling 4-5
Lightfastness 5
Flame resistance IMO, 1 IM UNI 9175, EN 1021-1:2006, EN 1021-2:2006, CRIB 5, TB 117:2013

**Leg material**
*Beech wood*
Painted

*Steel*
Powder coated

**Inside material**
PU foam
Wooden structure

**Country of origin**
Lithuania

**3D model**
3D files of all products are available on the product pages on hem.com

**Product accessory**
Palo Side Table

**Tests & certifications**
EN 16139:2013 – L2: Extreme use – Furniture – Strength, durability and safety – Requirements for non-domestic seating

**Beige**
*Amdal (350)*

**Brown-Black**
*Amdal (280)*

**Chalk**
*Amdal (130)*

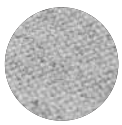

**Grey**
*Amdal (110)*

**Pine**
*Sera (Hem exclusive)*

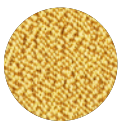

**Sunflower**
*Sera (Hem exclusive)*

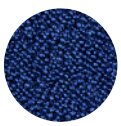

**Cobalt**
*Sera (Hem exclusive)*

**Eggshell**
*Bute Storr*

**Sawdust**
*Bute Storr*

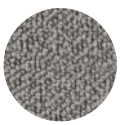

**Pebble**
*Bute Storr*

**0361**
*Autumn*

**0221**
*Autumn*

**VL30**
*Velluto Coex*



**Light Grey (RAL 7035)**
*Leg color*

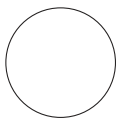

**Pure White (RAL 9010)**
*Leg color*

**Jet Black (RAL 9005)**
*Leg color*

**Modularity**
This is a modular product that can be configured freely to fit your needs. Reach out to info@hem.com for assistance

**Samples**
We supply samples of our material finishes. You can order them directly from hem.com/samples

**Graded-in Textile and Made-To-Order**
Reach out to your local representative for the full selection of made-to-order options.

**Palo Single-seater**

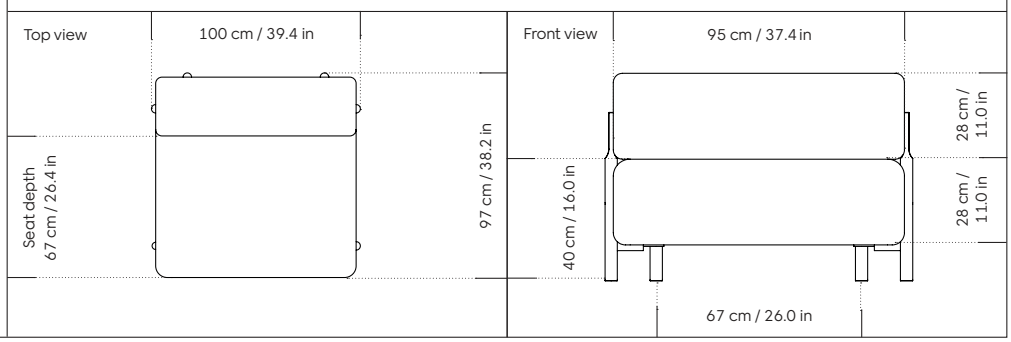

# Palo Ottoman

*Design by Hem*

Palo is whatever you want it to be; a chaise, an ottoman, a sofa. This is furniture that evolves and grows with you. Elegant wood and metal legs are a hallmark of the architectural Palo family; as well as providing detail, they are the secret to a modular system that allows cushions and armrests to be moved and repositioned across the whole series. It doesn't end there... Want a side table for your tea? Or need to replace an individual element? Our approach enables you to update and grow your system, adapting to whatever life brings.

**Upholstery**
*Amdal*
by GU (Norway)
70% Virgin Wool, 30% Viscose
100,000 Martindale
Pilling 4
Lightfastness 5-7
Flame resistance EN 1021: Part 1 & 2, BS 5852: Part 1 & 2 (Crib 5), US Cal. TB 117

*Sera*
by Rohi (Germany)
94% Virgin Wool, 6% Polyamide
122,000 Martindale
Pilling 4-5
Lightfastness 5-8
Flame resistance EN 1021: Part 1 & 2, BS 5852: Part 1 & 2 (Crib 5), US Cal. TB 117

*Bute Storr*
by Bute Fabrics (Scotland)
97% Pure New Wool, 3% Nylon
65,000 Martindale
Lightfastness 5 (BS EN ISO 105 – B02)
Flame resistance IMO FTP Code(2010) Annex 1, Part 8, BS 5852: PART 1 & 2 (Crib 5), US Cal. TB 117

*Autumn*
by Kvadrat (Denmark)
100% Recycled Polyester
50,000 Martindale
Pilling 4-5
Lightfastness 6-7
Flame resistance ASTM E 84 Adhered, ASTM E84 Class A Unadhered, EN 1021: Part 1 & 2, IMO 2010 FTP Code Part 8, US Cal. TB 117-2013

*Velluto Coex*
by Chioccarello (Italy)
100% Cotton
65,000 Martindale
Pilling 4-5
Lightfastness 5
Flame resistance IMO, 1 IM UNI 9175, EN 1021-1:2006, EN 1021-2:2006, CRIB 5, TB 117:2013

**Leg material**
*Beech wood*
Painted

*Steel*
Powder coated

**Inside material**
PU foam
Wooden structure

**Country of origin**
Lithuania

**3D model**
3D files of all products are available on the product pages on hem.com

**Product accessory**
Palo Side Table

**Tests & certifications**
EN 16139:2013 – L2: Extreme use – Furniture – Strength, durability and safety – Requirements for non-domestic seating

**Beige**
*Amdal (350)*

**Brown-Black**
*Amdal (280)*

**Chalk**
*Amdal (130)*

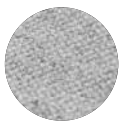

**Grey**
*Amdal (110)*

**Pine**
*Sera (Hem exclusive)*

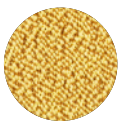

**Sunflower**
*Sera (Hem exclusive)*

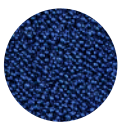

**Cobalt**
*Sera (Hem exclusive)*

**Eggshell**
*Bute Storr*

**Sawdust**
*Bute Storr*

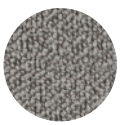

**Pebble**
*Bute Storr*

**0361**
*Autumn*

**0221**
*Autumn*

**VL30**
*Velluto Coex*



**Light Grey (RAL 7035)**
*Leg color*

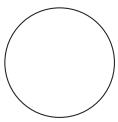

**Pure White (RAL 9010)**
*Leg color*

**Jet Black (RAL 9005)**
*Leg color*

**Modularity**
This is a modular product that can be configured freely to fit your needs. Reach out to info@hem.com for assistance

**Samples**
We supply samples of our material finishes. You can order them directly from hem.com/samples

**Graded-in Textile and Made-To-Order**
Reach out to your local representative for the full selection of made-to-order options.

**Palo Ottoman**

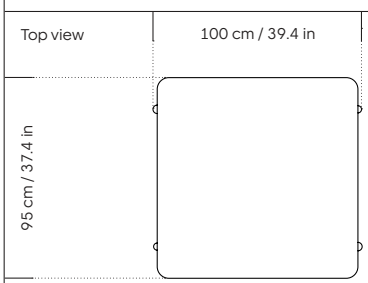


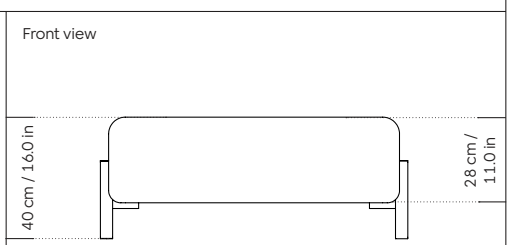

# Palo Sofas — Price List

| Product name | Finish | SKU | Retail Price SEK | List Price SEK (ex VAT) |
|---|---|---|---|---|
| **Curated Collection** | | | | |
| **Palo 2-seater Sofa** | Autumn 221/White | 90424 | 28 739 | 23 368 |
| **Palo 2-seater Sofa** | Autumn 361/Black | 90702 | 28 739 | 23 368 |
| **Palo 2-seater Sofa** | Beige | 20021 | 33 454 | 27 198 |
| **Palo 2-seater Sofa** | Brown-Black | 20012 | 33 454 | 27 198 |
| **Palo 2-seater Sofa** | Chalk | 12920 | 33 454 | 27 198 |
| **Palo 2-seater Sofa** | Cobalt | 20361 | 35 179 | 28 601 |
| **Palo 2-seater Sofa** | Grey | 12929 | 33 454 | 27 198 |
| **Palo 2-seater Sofa** | Pine | 20272 | 35 179 | 28 601 |
| **Palo 2-seater Sofa** | Storr 612/Black | 90723 | 41 849 | 34 029 |
| **Palo 2-seater Sofa** | Storr 1501/White | 90442 | 41 849 | 34 029 |
| **Palo 2-seater Sofa** | Storr 3405/Black | 90722 | 41 849 | 34 029 |
| **Palo 2-seater Sofa** | Sunflower | 20273 | 35 179 | 28 601 |
| **Palo 2-seater Sofa** | Velluto Coex VL30/Black | 31873 | 36 789 | 29 912 |
| **Palo 2-seater Sofa Chaise Left** | Autumn 221/White | 90486 | 36 444 | 29 624 |
| **Palo 2-seater Sofa Chaise Left** | Autumn 361/Black | 90758 | 36 444 | 29 624 |
| **Palo 2-seater Sofa Chaise Left** | Beige | 20022 | 38 744 | 31 499 |
| **Palo 2-seater Sofa Chaise Left** | Brown-Black | 20013 | 38 744 | 31 499 |
| **Palo 2-seater Sofa Chaise Left** | Chalk | 12921 | 38 744 | 31 499 |
| **Palo 2-seater Sofa Chaise Left** | Cobalt | 20362 | 41 044 | 33 373 |
| **Palo 2-seater Sofa Chaise Left** | Grey | 12930 | 38 744 | 31 499 |
| **Palo 2-seater Sofa Chaise Left** | Pine | 20268 | 41 044 | 33 373 |
| **Palo 2-seater Sofa Chaise Left** | Storr 612/Black | 90779 | 47 944 | 38 974 |
| **Palo 2-seater Sofa Chaise Left** | Storr 1501/White | 90504 | 47 944 | 38 974 |
| **Palo 2-seater Sofa Chaise Left** | Storr 3405/Black | 90778 | 47 944 | 38 974 |
| **Palo 2-seater Sofa Chaise Left** | Sunflower | 20269 | 41 044 | 33 373 |
| **Palo 2-seater Sofa Chaise Left** | Velluto Coex VL30/Black | 31874 | 43 344 | 35 236 |
| **Palo 2-seater Sofa Chaise Right** | Autumn 221/White | 90517 | 36 444 | 29 624 |
| **Palo 2-seater Sofa Chaise Right** | Autumn 361/Black | 90786 | 36 444 | 29 624 |
| **Palo 2-seater Sofa Chaise Right** | Beige | 20023 | 38 744 | 31 499 |
| **Palo 2-seater Sofa Chaise Right** | Brown-Black | 20014 | 38 744 | 31 499 |
| **Palo 2-seater Sofa Chaise Right** | Chalk | 12922 | 38 744 | 31 499 |
| **Palo 2-seater Sofa Chaise Right** | Cobalt | 20363 | 41 044 | 33 373 |
| **Palo 2-seater Sofa Chaise Right** | Grey | 12931 | 38 744 | 31 499 |
| **Palo 2-seater Sofa Chaise Right** | Pine | 20270 | 41 044 | 33 373 |
| **Palo 2-seater Sofa Chaise Right** | Storr 612/Black | 90807 | 47 944 | 38 974 |
| **Palo 2-seater Sofa Chaise Right** | Storr 1501/White | 90535 | 47 944 | 38 974 |
| **Palo 2-seater Sofa Chaise Right** | Storr 3405/Black | 90806 | 47 944 | 38 974 |
| **Palo 2-seater Sofa Chaise Right** | Sunflower | 20271 | 41 044 | 33 373 |
| **Palo 2-seater Sofa Chaise Right** | Velluto Coex VL30/Black | 31875 | 43 344 | 35 236 |
| **Palo 2-seater Sofa with Armrests** | Autumn 221/White | 90455 | 40 009 | 32 522 |
| **Palo 2-seater Sofa with Armrests** | Autumn 361/Black | 90730 | 40 009 | 32 522 |
| **Palo 2-seater Sofa with Armrests** | Beige | 20020 | 43 459 | 35 328 |
| **Palo 2-seater Sofa with Armrests** | Brown-Black | 20011 | 43 459 | 35 328 |
| **Palo 2-seater Sofa with Armrests** | Chalk | 12919 | 43 459 | 35 328 |
| **Palo 2-seater Sofa with Armrests** | Cobalt | 20360 | 46 909 | 38 134 |
| **Palo 2-seater Sofa with Armrests** | Grey | 12928 | 43 459 | 35 328 |
| **Palo 2-seater Sofa with Armrests** | Pine | 20274 | 46 909 | 38 134 |
| **Palo 2-seater Sofa with Armrests** | Storr 612/Black | 90751 | 57 259 | 46 552 |
| **Palo 2-seater Sofa with Armrests** | Storr 1501/White | 90473 | 57 259 | 46 552 |
| **Palo 2-seater Sofa with Armrests** | Storr 3405/Black | 90750 | 57 259 | 46 552 |
| **Palo 2-seater Sofa with Armrests** | Sunflower | 20275 | 46 909 | 38 134 |
| **Palo 2-seater Sofa with Armrests** | Velluto Coex VL30/Black | 31876 | 50 359 | 40 940 |
| **Palo Corner Sofa Left** | Autumn 221/White | 90548 | 57 489 | 46 736 |
| **Palo Corner Sofa Left** | Autumn 361/Black | 90814 | 57 489 | 46 736 |
| **Palo Corner Sofa Left** | Beige | 20027 | 62 204 | 50 577 |
| **Palo Corner Sofa Left** | Brown-Black | 20018 | 62 204 | 50 577 |
| **Palo Corner Sofa Left** | Chalk | 12956 | 62 204 | 50 577 |
| **Palo Corner Sofa Left** | Cobalt | 20367 | 64 504 | 52 440 |
| **Palo Corner Sofa Left** | Grey | 12958 | 62 204 | 50 577 |
| **Palo Corner Sofa Left** | Pine | 20276 | 64 504 | 52 440 |
| **Palo Corner Sofa Left** | Storr 612/Black | 90835 | 71 404 | 58 052 |
| **Palo Corner Sofa Left** | Storr 1501/White | 90566 | 71 404 | 58 052 |
| **Palo Corner Sofa Left** | Storr 3405/Black | 90834 | 71 404 | 58 052 |
| **Palo Corner Sofa Left** | Sunflower | 20277 | 64 504 | 52 440 |
| **Palo Corner Sofa Left** | Velluto Coex VL30/Black | 31877 | 66 804 | 54 315 |

# Palo Sofas — Price List

| Product name | Finish | SKU | Retail Price SEK | List Price SEK (ex VAT) |
|---|---|---|---|---|
| **Curated Collection** | | | | |
| **Palo Corner Sofa Right** | Autumn 221/White | 90579 | 57 489 | 46 736 |
| **Palo Corner Sofa Right** | Autumn 361/Black | 90842 | 57 489 | 46 736 |
| **Palo Corner Sofa Right** | Beige | 20026 | 62 204 | 50 577 |
| **Palo Corner Sofa Right** | Brown-Black | 20017 | 62 204 | 50 577 |
| **Palo Corner Sofa Right** | Chalk | 12955 | 62 204 | 50 577 |
| **Palo Corner Sofa Right** | Cobalt | 20366 | 64 504 | 52 440 |
| **Palo Corner Sofa Right** | Grey | 12957 | 62 204 | 50 577 |
| **Palo Corner Sofa Right** | Pine | 20278 | 64 504 | 52 440 |
| **Palo Corner Sofa Right** | Storr 612/Black | 90863 | 71 404 | 58 052 |
| **Palo Corner Sofa Right** | Storr 1501/White | 90597 | 71 404 | 58 052 |
| **Palo Corner Sofa Right** | Storr 3405/Black | 90862 | 71 404 | 58 052 |
| **Palo Corner Sofa Right** | Sunflower | 20279 | 64 504 | 52 440 |
| **Palo Corner Sofa Right** | Velluto Coex VL30/Black | 31878 | 66 804 | 54 315 |
| **Palo Lounger** | Autumn 221/White | 90610 | 26 439 | 21 494 |
| **Palo Lounger** | Autumn 361/Black | 90870 | 26 439 | 21 494 |
| **Palo Lounger** | Beige | 20024 | 28 164 | 22 897 |
| **Palo Lounger** | Brown-Black | 20015 | 28 164 | 22 897 |
| **Palo Lounger** | Chalk | 12923 | 28 164 | 22 897 |
| **Palo Lounger** | Cobalt | 20364 | 29 314 | 23 828 |
| **Palo Lounger** | Grey | 12932 | 28 164 | 22 897 |
| **Palo Lounger** | Pine | 20280 | 29 314 | 23 828 |
| **Palo Lounger** | Storr 612/Black | 90891 | 32 764 | 26 634 |
| **Palo Lounger** | Storr 1501/White | 90628 | 32 764 | 26 634 |
| **Palo Lounger** | Storr 3405/Black | 90890 | 32 764 | 26 634 |
| **Palo Lounger** | Sunflower | 20281 | 29 314 | 23 828 |
| **Palo Lounger** | Velluto Coex VL30/Black | 31879 | 30 464 | 24 771 |
| **Palo Ottoman** | Autumn 221/White | 90641 | 11 374 | 9 246 |
| **Palo Ottoman** | Autumn 361/Black | 90898 | 11 374 | 9 246 |
| **Palo Ottoman** | Beige | 20025 | 12 294 | 9 994 |
| **Palo Ottoman** | Brown-Black | 20016 | 12 294 | 9 994 |
| **Palo Ottoman** | Chalk | 12917 | 12 294 | 9 994 |
| **Palo Ottoman** | Cobalt | 20365 | 12 984 | 10 557 |
| **Palo Ottoman** | Grey | 12926 | 12 294 | 9 994 |
| **Palo Ottoman** | Pine | 20282 | 12 984 | 10 557 |
| **Palo Ottoman** | Storr 612/Black | 90919 | 15 054 | 12 236 |
| **Palo Ottoman** | Storr 1501/White | 90659 | 15 054 | 12 236 |
| **Palo Ottoman** | Storr 3405/Black | 90918 | 15 054 | 12 236 |
| **Palo Ottoman** | Sunflower | 20283 | 12 984 | 10 557 |
| **Palo Ottoman** | Velluto Coex VL30/Black | 31880 | 13 674 | 11 121 |
| **Palo Side Table** | Blue | 30288 | 1 714 | 1 392 |
| **Palo Side Table** | Jet Black | 30291 | 1 714 | 1 392 |
| **Palo Side Table** | Light Grey | 30290 | 1 714 | 1 392 |
| **Palo Side Table** | Pure White | 30289 | 1 714 | 1 392 |
| **Palo Single-seater** | Autumn 221/White | 90672 | 18 389 | 14 950 |
| **Palo Single-seater** | Autumn 361/Black | 90926 | 18 389 | 14 950 |
| **Palo Single-seater** | Beige | 20019 | 19 999 | 16 261 |
| **Palo Single-seater** | Brown-Black | 20010 | 19 999 | 16 261 |
| **Palo Single-seater** | Chalk | 12918 | 19 999 | 16 261 |
| **Palo Single-seater** | Cobalt | 20359 | 21 149 | 17 193 |
| **Palo Single-seater** | Grey | 12927 | 19 999 | 16 261 |
| **Palo Single-seater** | Pine | 20284 | 21 149 | 17 193 |
| **Palo Single-seater** | Storr 612/Black | 90947 | 24 599 | 19 999 |
| **Palo Single-seater** | Storr 1501/White | 90690 | 24 599 | 19 999 |
| **Palo Single-seater** | Storr 3405/Black | 90946 | 24 599 | 19 999 |
| **Palo Single-seater** | Sunflower | 20285 | 21 149 | 17 193 |
| **Palo Single-seater** | Velluto Coex VL30/Black | 31881 | 22 299 | 18 124 |
| **Graded-in Textile*** | | | | |
| **Palo 2-seater Sofa** | Grade 1 | | 32 419 | 26 358 |
| **Palo 2-seater Sofa** | Grade 2 | | 34 949 | 28 417 |
| **Palo 2-seater Sofa** | Grade 3 | | 36 789 | 29 912 |
| **Palo 2-seater Sofa** | Grade 4 | | 38 514 | 31 315 |
| **Palo 2-seater Sofa** | Grade 5 | | 41 044 | 33 373 |
| **Palo 2-seater Sofa** | Grade 6 | | 44 609 | 36 271 |



*Please make sure to check pro.hem.com for the most up to date information on finishes and stock availability.

# Palo Sofas — Price List

| Product name | Finish | SKU | Retail Price SEK | List Price SEK (ex VAT) |
|---|---|---|---|---|
| **Graded-in Textile*** | | | | |
| **Palo 2-seater Sofa Chaise Left** | Grade 1 | | 37 019 | 30 096 |
| **Palo 2-seater Sofa Chaise Left** | Grade 2 | | 40 354 | 32 810 |
| **Palo 2-seater Sofa Chaise Left** | Grade 3 | | 42 654 | 34 673 |
| **Palo 2-seater Sofa Chaise Left** | Grade 4 | | 44 954 | 36 547 |
| **Palo 2-seater Sofa Chaise Left** | Grade 5 | | 48 174 | 39 169 |
| **Palo 2-seater Sofa Chaise Left** | Grade 6 | | 52 659 | 42 815 |
| **Palo 2-seater Sofa Chaise Right** | Grade 1 | | 37 019 | 30 096 |
| **Palo 2-seater Sofa Chaise Right** | Grade 2 | | 40 354 | 32 810 |
| **Palo 2-seater Sofa Chaise Right** | Grade 3 | | 42 654 | 34 673 |
| **Palo 2-seater Sofa Chaise Right** | Grade 4 | | 44 954 | 36 547 |
| **Palo 2-seater Sofa Chaise Right** | Grade 5 | | 48 174 | 39 169 |
| **Palo 2-seater Sofa Chaise Right** | Grade 6 | | 52 659 | 42 815 |
| **Palo 2-seater Sofa with Armrests** | Grade 1 | | 41 619 | 33 833 |
| **Palo 2-seater Sofa with Armrests** | Grade 2 | | 45 069 | 36 639 |
| **Palo 2-seater Sofa with Armrests** | Grade 3 | | 47 484 | 38 606 |
| **Palo 2-seater Sofa with Armrests** | Grade 4 | | 50 589 | 41 124 |
| **Palo 2-seater Sofa with Armrests** | Grade 5 | | 53 464 | 43 470 |
| **Palo 2-seater Sofa with Armrests** | Grade 6 | | 58 639 | 47 679 |
| **Palo Corner Sofa Left** | Grade 1 | | 58 639 | 47 679 |
| **Palo Corner Sofa Left** | Grade 2 | | 63 354 | 51 509 |
| **Palo Corner Sofa Left** | Grade 3 | | 66 689 | 54 223 |
| **Palo Corner Sofa Left** | Grade 4 | | 70 024 | 56 925 |
| **Palo Corner Sofa Left** | Grade 5 | | 74 739 | 60 766 |
| **Palo Corner Sofa Left** | Grade 6 | | 81 179 | 65 999 |
| **Palo Corner Sofa Right** | Grade 1 | | 58 639 | 47 679 |
| **Palo Corner Sofa Right** | Grade 2 | | 63 354 | 51 509 |
| **Palo Corner Sofa Right** | Grade 3 | | 66 689 | 54 223 |
| **Palo Corner Sofa Right** | Grade 4 | | 70 024 | 56 925 |
| **Palo Corner Sofa Right** | Grade 5 | | 74 739 | 60 766 |
| **Palo Corner Sofa Right** | Grade 6 | | 81 179 | 65 999 |
| **Palo Lounger** | Grade 1 | | 26 899 | 21 873 |
| **Palo Lounger** | Grade 2 | | 28 739 | 23 368 |
| **Palo Lounger** | Grade 3 | | 30 004 | 24 392 |
| **Palo Lounger** | Grade 4 | | 31 269 | 25 427 |
| **Palo Lounger** | Grade 5 | | 33 109 | 26 922 |
| **Palo Lounger** | Grade 6 | | 35 639 | 28 980 |
| **Palo Ottoman** | Grade 1 | | 11 604 | 9 430 |
| **Palo Ottoman** | Grade 2 | | 12 639 | 10 270 |
| **Palo Ottoman** | Grade 3 | | 13 444 | 10 925 |
| **Palo Ottoman** | Grade 4 | | 14 249 | 11 581 |
| **Palo Ottoman** | Grade 5 | | 15 284 | 12 420 |
| **Palo Ottoman** | Grade 6 | | 16 779 | 13 639 |
| **Palo Single-seater** | Grade 1 | | 18 849 | 15 330 |
| **Palo Single-seater** | Grade 2 | | 20 344 | 16 537 |
| **Palo Single-seater** | Grade 3 | | 21 379 | 17 377 |
| **Palo Single-seater** | Grade 4 | | 22 414 | 18 228 |
| **Palo Single-seater** | Grade 5 | | 23 794 | 19 343 |
| **Palo Single-seater** | Grade 6 | | 25 864 | 21 022 |

*Please make sure to check pro.hem.com for the most up to date information on finishes and stock availability.

# Puffy Sofa

*Design by Faye Toogood*

Voluminous, plush, instantly recognizable, the Puffy series by Faye Toogood has quickly become a coveted contemporary standard. This stylish seating offers maximum impact and extreme comfort. The Puffy Sofa is a variation on a theme, sharing all the same qualities as its Puffy siblings, but in a size big enough to share. Sink into the extravagant quilt-like upholstery alongside friends, and you can indulge in the reassuring comfort of the plump padding with loved ones. The Puffy family is made up of a generous upholstery cover supported on a rigid steel frame. Our Puffy Sofa is a 2.5 seater, meaning it is compact enough for small spaces, yet luxuriously roomy for a plus-one situation. The Puffy Sofa frame is available in powder-coated or sand-blasted steel finishes and a choice of thick canvas or luxurious leather upholstery.

**Upholstery**
*Disco Coex*
by Chioccarello (Italy)
70% Cotton, 20% Acrylic, 5% Viscose, 5% Linen
>50,000 Martindale
Pilling 4-5
Lightfastness 4-5
Flame resistance IMO, 1 IM UNI 9175, EN 1021-1:2006, EN 1021-2:2006, CRIB 5, TB 117:2013

*Elmosoft Leather*
by Elmo (Sweden)
Scandinavian Grain Leather, Semi-aniline
Lightfastness 6

*Bute Storr*
by Bute Fabrics (Scotland)
97% Pure New Wool, 3% Nylon
65,000 Martindale
Lightfastness 5 (BS EN ISO 105 – B02)
Flame resistance IMO FTP Code(2010) Annex 1, Part 8, BS 5852: PART 1 & 2 (Crib 5), US Cal. TB 117

*Velluto Coex*
by Chioccarello (Italy)
100% Cotton
65,000 Martindale
Pilling 4-5
Lightfastness 5
Flame resistance IMO, 1 IM UNI 9175, EN 1021-1:2006, EN 1021-2:2006, CRIB 5, TB 117:2013

**Leg material**
*Steel*
Stainless, Sand Blasted
Powder Coated

**Inside material**
50% PU Foam, 50% Ball Fiber

**Country of origin**
Lithuania

**Tests & certifications**
EN 16139:2013 – L2: Extreme use – Furniture – Strength, durability and safety – Requirements for non-domestic seating

**Natural**
*Disco Coex (Number 5)*

**Anthracite**
*Disco Coex (Number 26)*

**Sand Leather***
*Elmosoft Leather (02119)*

*Elmosoft Leather (03009)*

**Cognac Leather**
*Elmosoft Leather (54035)*

**Eggshell**
*Bute Storr Eggshell*

**Sawdust**
*Bute Storr Sawdust*

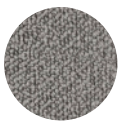

**Pebble**
*Bute Storr Pebble*

**VL30**
*Velluto Coex*

**Stainless**
*Steel*

**Black Grey (RAL 7021)**
*Powder Coated Steel*

**Cream (RAL 9001)**
*Powder Coated Steel*

*expiring finish

**Puffy Sofa Frame**

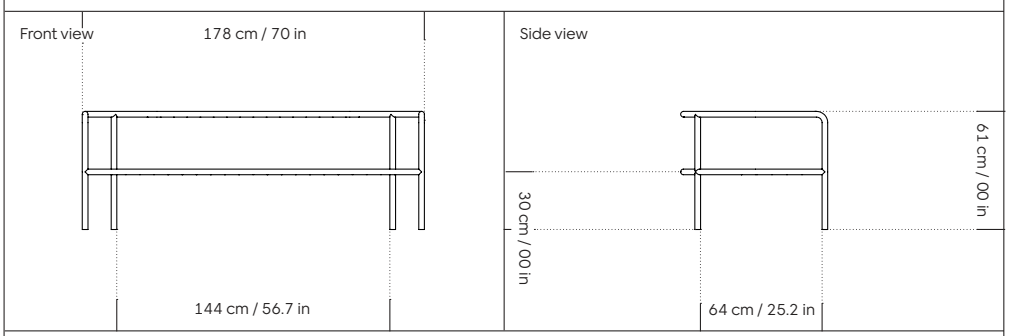


**Puffy Sofa Duvet**

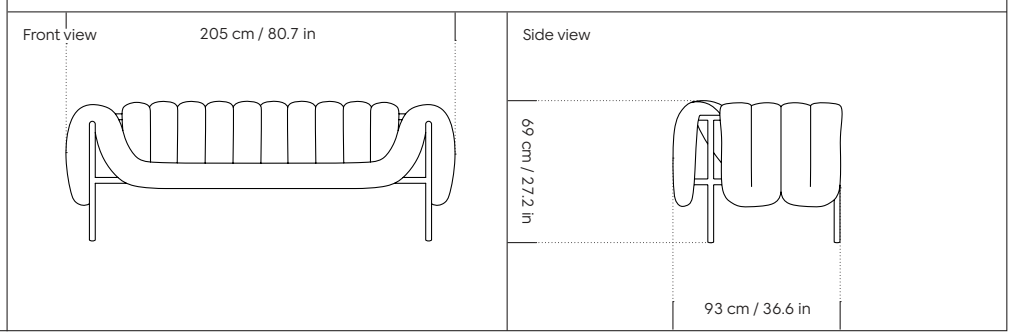

# Puffy Sofa — Price List

| Product name | Finish | SKU | Retail Price SEK | List Price SEK (ex VAT) |
|---|---|---|---|---|
| **Curated Collection** | | | | |
| **Puffy 2.5-seater Sofa** | Anthracite / Black Grey | 20718 | 48 174 | 39 169 |
| **Puffy 2.5-seater Sofa** | Anthracite / Cream | 20719 | 48 174 | 39 169 |
| **Puffy 2.5-seater Sofa** | Anthracite / Stainless | 20720 | 56 339 | 45 805 |
| **Puffy 2.5-seater Sofa** | Elmosoft Leather 03009 / Black Grey | 95997 | 70 369 | 57 213 |
| **Puffy 2.5-seater Sofa** | Elmosoft Leather 03009 / Cream | 95979 | 70 369 | 57 213 |
| **Puffy 2.5-seater Sofa** | Elmosoft Leather 03009 / Stainless | 96015 | 76 234 | 61 974 |
| **Puffy 2.5-seater Sofa** | Elmosoft Leather 54035 / Black Grey | 95996 | 70 369 | 57 213 |
| **Puffy 2.5-seater Sofa** | Elmosoft Leather 54035 / Cream | 95978 | 70 369 | 57 213 |
| **Puffy 2.5-seater Sofa** | Elmosoft Leather 54035 / Stainless | 96014 | 76 234 | 61 974 |
| **Puffy 2.5-seater Sofa** | Natural / Black Grey | 20721 | 48 174 | 39 169 |
| **Puffy 2.5-seater Sofa** | Natural / Cream | 20722 | 48 174 | 39 169 |
| **Puffy 2.5-seater Sofa** | Natural / Stainless | 20723 | 56 339 | 45 805 |
| **Puffy 2.5-seater Sofa** | Sand Leather / Black Grey | 20724 | 70 369 | 57 213 |
| **Puffy 2.5-seater Sofa** | Sand Leather / Cream | 20725 | 70 369 | 57 213 |
| **Puffy 2.5-seater Sofa** | Sand Leather / Stainless | 20726 | 76 234 | 61 974 |
| **Puffy 2.5-seater Sofa** | Storr 0612/Black Grey | 31823 | 64 849 | 52 728 |
| **Puffy 2.5-seater Sofa** | Storr 0612/Cream | 31826 | 64 849 | 52 728 |
| **Puffy 2.5-seater Sofa** | Storr 0612/Stainless Steel | 31829 | 71 289 | 57 960 |
| **Puffy 2.5-seater Sofa** | Storr 1501/Black Grey | 31824 | 64 849 | 52 728 |
| **Puffy 2.5-seater Sofa** | Storr 1501/Cream | 31827 | 64 849 | 52 728 |
| **Puffy 2.5-seater Sofa** | Storr 1501/Stainless Steel | 31830 | 71 289 | 57 960 |
| **Puffy 2.5-seater Sofa** | Storr 3405/Black Grey | 31825 | 64 849 | 52 728 |
| **Puffy 2.5-seater Sofa** | Storr 3405/Cream | 31828 | 64 849 | 52 728 |
| **Puffy 2.5-seater Sofa** | Storr 3405/Stainless Steel | 31831 | 71 289 | 57 960 |
| **Puffy 2.5-seater Sofa** | Velluto Coex VL30/Black Grey | 31863 | 57 489 | 46 736 |
| **Puffy 2.5-seater Sofa** | Velluto Coex VL30/Cream | 31864 | 57 489 | 46 736 |
| **Puffy 2.5-seater Sofa** | Velluto Coex VL30/Stainless Steel | 31865 | 65 194 | 53 004 |
| **Graded-in Textile*** | | | | |
| **Puffy 2.5-seater Sofa** | Powder Coated PG1 | | 50 474 | 41 032 |
| **Puffy 2.5-seater Sofa** | Powder Coated PG2 | | 53 464 | 43 470 |
| **Puffy 2.5-seater Sofa** | Powder Coated PG3 | | 55 304 | 44 965 |
| **Puffy 2.5-seater Sofa** | Powder Coated PG4 | | 57 604 | 46 828 |
| **Puffy 2.5-seater Sofa** | Powder Coated PG5 | | 60 939 | 49 542 |
| **Puffy 2.5-seater Sofa** | Powder Coated PG6 | | 65 424 | 53 188 |
| **Puffy 2.5-seater Sofa** | Stainless Steel PG1 | | 58 754 | 47 771 |
| **Puffy 2.5-seater Sofa** | Stainless Steel PG2 | | 61 744 | 50 198 |
| **Puffy 2.5-seater Sofa** | Stainless Steel PG3 | | 63 699 | 51 785 |
| **Puffy 2.5-seater Sofa** | Stainless Steel PG4 | | 65 654 | 53 372 |
| **Puffy 2.5-seater Sofa** | Stainless Steel PG5 | | 68 989 | 56 086 |
| **Puffy 2.5-seater Sofa** | Stainless Steel PG6 | | 73 474 | 59 731 |

*Please make sure to check pro.hem.com for the most up to date information on finishes and stock availability.

# Tables

# Side Tables

**A great table brings people together. It is something to gather around, to make decisions at, to create an interior statement with. We offer a whole range of these supporting stars, from maximal to minimal.**

# Alle Coffee Tables

*Design by Staffan Holm*

The solid-oak and walnut Alle Tables by Staffan Holm are a family of furniture that is especially Hem: traditional modes of making reclaimed for modern manufacture; good looks and practicality given equal consideration; engineering and handwork combined; quality materials used liberally. The circular Alle Coffee Table shares the same key features as the larger members of the family, in particular a softly rounded edge and a clever construction that requires no tools for assembly. Alle means "everyone" in German, and this table is a true reflection of the design principles we cherish. The Alle Coffee Table is available in three different finishes and three different sizes, use them together to create a compelling hard landscape.

| Product name | Finish | SKU |
|---|---|---|
| **Alle Coffee Table Large** | Black | 12869 |
| | Oak | 12971 |
| | Walnut | 12878 |
| **Alle Coffee Table Medium** | Black | 12868 |
| | Oak | 12865 |
| | Walnut | 12877 |
| **Alle Coffee Table Small** | Black | 12867 |
| | Oak | 12864 |
| | Walnut | 12876 |

**Material**
*Solid Oak*
Quercus Robur
Lacquered

*Solid Walnut*
Juglans Nigra
Oiled

Wood is a natural material. The color might vary from piece to piece

**Country of origin**
Poland

**3D model**
3D files of all products are available on the product pages on hem.com

**Always in stock**
We keep all our products in stock and ready to ship from our warehouses in the US and EU

**Black**
*Solid Oak*

**Oak**
*Solid Oak*

**Walnut**
*Solid Walnut*

**Samples**
We supply samples of all our material finishes, order them directly from hem.com/samples

**Alle Coffee Table Large**

Front view

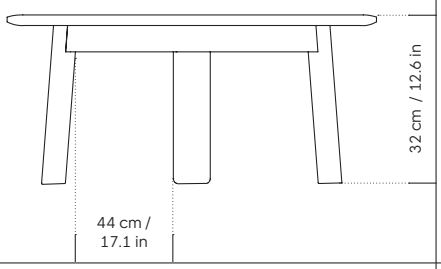


**Alle Coffee Table Medium**

Front view

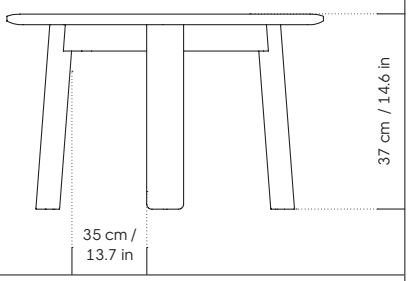


**Alle Coffee Table Small**

Front view

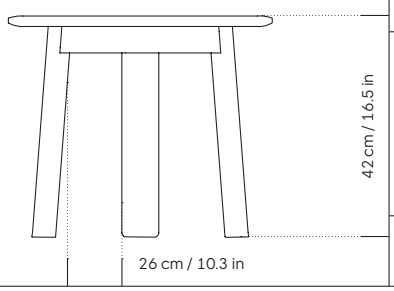


**Alle Coffee Table sizes**

Top view

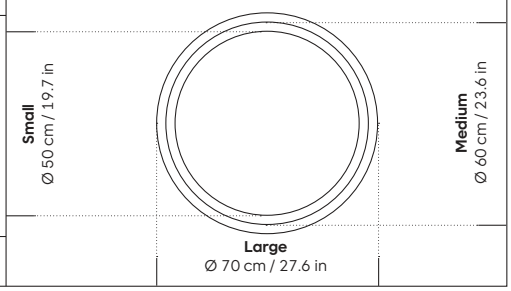

# Alle Coffee Table — Price List

| Product name | Finish | SKU | Retail Price SEK | List Price SEK (ex VAT) |
|---|---|---|---|---|
| **Curated Collection** | | | | |
| **Alle Coffee Coffee Table Large** | Black Oak | 12869 | 7 809 | 6 348 |
| **Alle Coffee Coffee Table Large** | Natural Oak | 12971 | 7 809 | 6 348 |
| **Alle Coffee Coffee Table Large** | Walnut | 12878 | 8 614 | 7 004 |
| **Alle Coffee Coffee Table Medium** | Black Oak | 12868 | 7 119 | 5 785 |
| **Alle Coffee Coffee Table Medium** | Natural Oak | 12865 | 7 119 | 5 785 |
| **Alle Coffee Coffee Table Medium** | Walnut | 12877 | 8 039 | 6 532 |
| **Alle Coffee Coffee Table Medium + Large** | Black Oak | 20036 | 14 927 | 12 133 |
| **Alle Coffee Coffee Table Medium + Large** | Natural Oak | 20038 | 14 927 | 12 133 |
| **Alle Coffee Coffee Table Medium + Large** | Walnut | 20037 | 16 652 | 13 536 |
| **Alle Coffee Coffee Table Small** | Black Oak | 12867 | 6 659 | 5 417 |
| **Alle Coffee Coffee Table Small** | Natural Oak | 12864 | 6 659 | 5 417 |
| **Alle Coffee Coffee Table Small** | Walnut | 12876 | 7 119 | 5 785 |
| **Alle Coffee Coffee Table Small + Medium** | Black Oak | 20039 | 13 777 | 11 201 |
| **Alle Coffee Coffee Table Small + Medium** | Natural Oak | 20041 | 13 777 | 11 201 |
| **Alle Coffee Coffee Table Small + Medium** | Walnut | 20040 | 15 157 | 12 328 |
| **Alle Coffee Coffee Table Small + Medium + Large** | Black Oak | 20042 | 21 586 | 17 549 |
| **Alle Coffee Coffee Table Small + Medium + Large** | Natural Oak | 20044 | 21 586 | 17 549 |
| **Alle Coffee Coffee Table Small + Medium + Large** | Walnut | 20043 | 23 771 | 19 320 |

# Alle Conference Table Media

*Design by Staffan Holm*

Staffan Holm repurposed traditional carpentry techniques for the design of the solid-oak Alle Table, which features a structural beam on the underside recalling ancient Japanese temple architecture. In this and many other ways, the Alle Table is especially Hem: traditional modes of making reclaimed for modern manufacture; good looks and practicality given equal consideration; engineering and handwork combined; quality materials used liberally. Alle means “everyone” in German, and this table is a true reflection of the design principles we cherish. The Conference Media variation of the Alle Table comes with media ports and hidden compartments for neat storage and cable management, helping you work more efficiently.

| Product name | Finish | SKU |
|---|---|---|
| **Alle Conference Table 250 cm / 98” Media** | Black | 30054 |
| | Oak | 12861 |
| **Alle Conference Table 300 cm / 118” Media** | Black | 30055 |
| | Oak | 13617 |

**Material**
*Solid Oak*
Quercus Robur
Lacquered

Wood is a natural material. The color might vary from piece to piece

**Country of origin**
Poland

**Tests & certifications**
EN 15372:2016 – L2: General use – Furniture – Strength, durability and safety – Requirements for non-domestic tables

**Always in stock**
We keep all our products in stock and ready to ship from our warehouses in the US and EU

**Oak**
*Solid Oak*

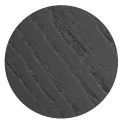

**Black**
*Solid Oak*

**Samples**
We supply samples of our material finishes. You can order them directly from hem.com/samples

**MTO**
Please refer to the price list or reach out to your local representative for our made-to-order options

**Alle Conference Table Media 250 cm / 98”**

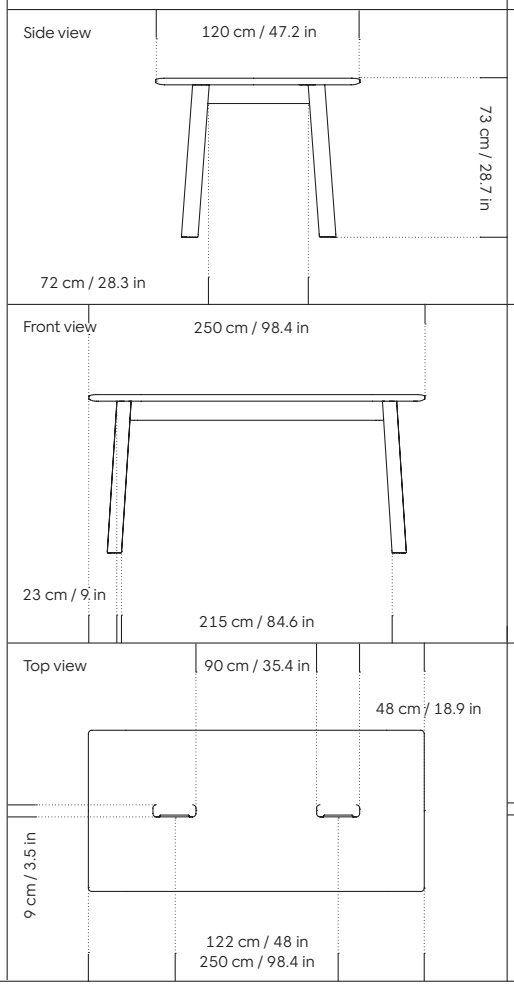


**Alle Conference Table Media 300 cm / 118”**

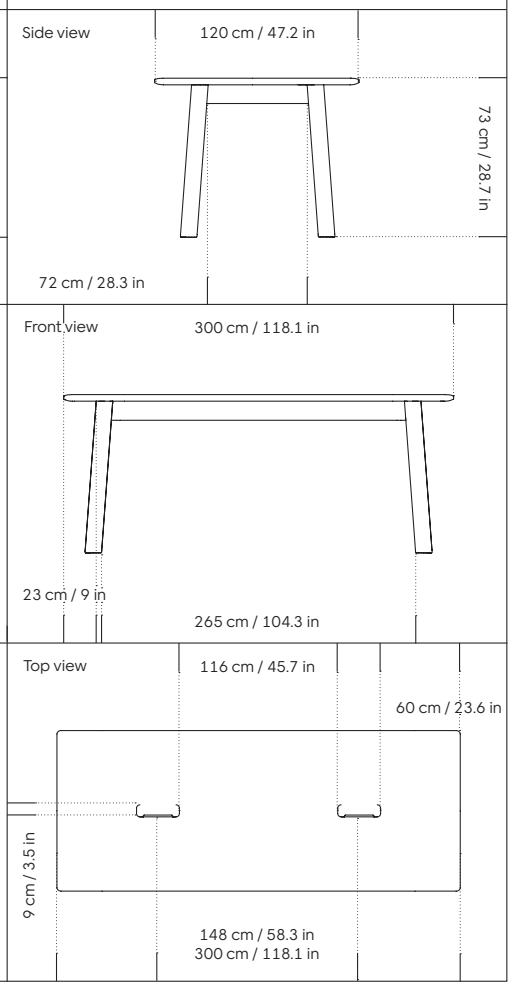

**3D model**
3D files of all products are available on the product pages on hem.com

**Cable tray cutout**

Table Top view

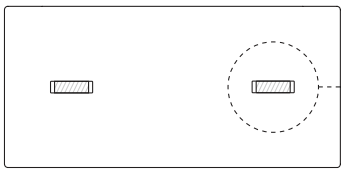

Close up Top View

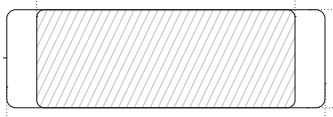


**Cable tray dimensions**

Top view

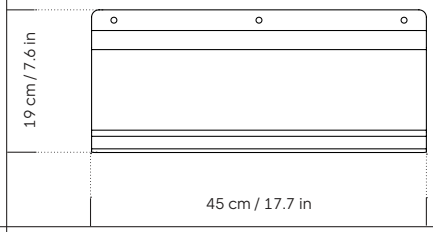


Side view

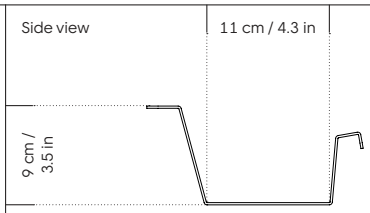


**Chairs per table**
The Alle Conference Table Media 250 cm / 98" fits up to 6 chairs. We are using the Kendo Swivel Chair 4-star as a reference.

**Alle Conference Table Media 250 cm / 98"**

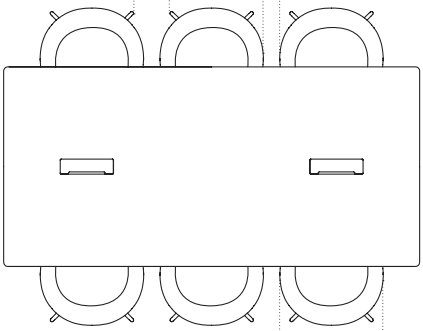


The Alle Conference Table Media 300 cm / 118" fits up to 8 chairs. We are using the Kendo Swivel Chair 4-star as a reference.

**Alle Conference Table Media 300 cm / 118"**

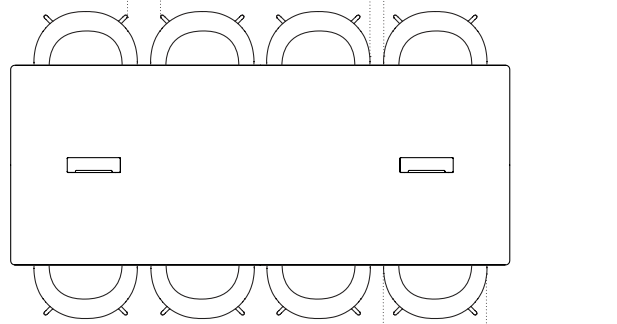

# Alle Round Table

*Design by Staffan Holm*

The solid-oak Alle Tables by Staffan Holm are a family of furniture that is especially Hem: traditional modes of making reclaimed for modern manufacture; good looks and practicality given equal consideration; engineering and handwork combined; quality materials used liberally. The Alle Round Table shares the same key features as the other members of the family, in particular a softly rounded edge and a clever construction that requires no tools for assembly. Alle means “everyone” in German, and this table is a true reflection of the design principles we cherish. The Round Media variation of the Alle Table comes with media ports and hidden compartments for neat storage and cable management, helping you work more efficiently.

| Product name | Finish | Finish | SKU |
|---|---|---|---|
| **Alle Round Table 150 cm / 59” Media** | | Oak | 30217 |
| | | Black | 30331 |
| **Alle Round Table 150 cm / 59”** | | Oak | 30375 |
| | | Black | 30376 |

**Material**
*Solid Oak*
Quercus Robur
Lacquered

Wood is a natural material. The color might vary from piece to piece

**Country of origin**
Poland

**Tests & certifications**
EN 15372:2016 – L2: General use – Furniture – Strength, durability and safety – Requirements for non-domestic tables

**3D model**
3D files of all products are available on the product pages on hem.com

**Always in stock**
We keep all our products in stock and ready to ship from our warehouses in the US and EU

**Samples**
We supply samples of all our material finishes, order them directly from hem.com/samples

**Oak**
*Solid Oak*

**Black**
*Solid Oak*

**Alle Round Table 150 cm / 59”**

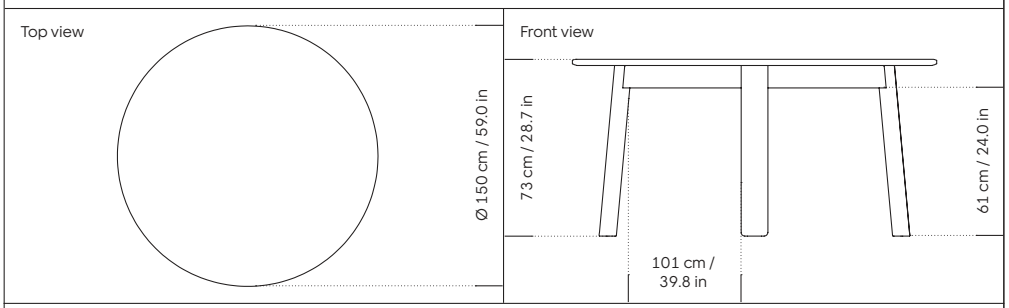


**Alle Round Table 150 cm / 59” Media**

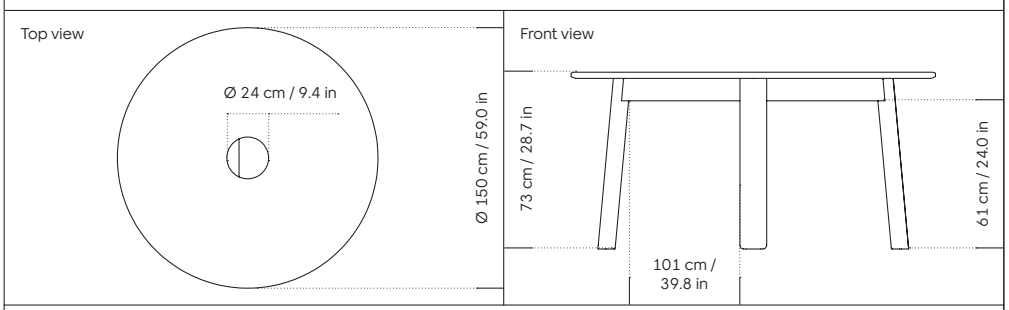


**Cable tray dimensions**

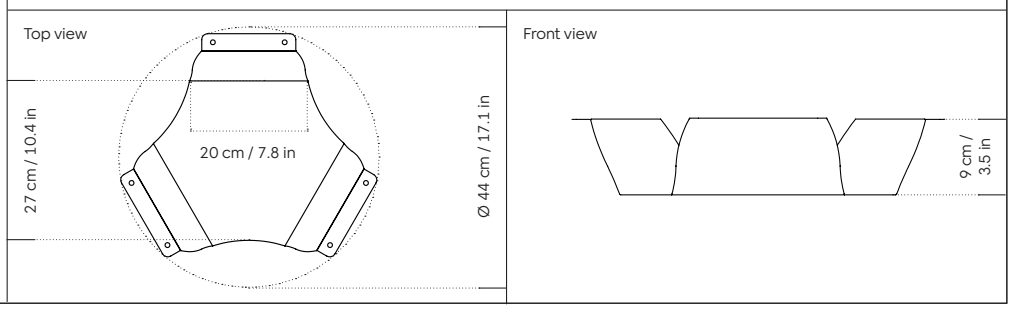

# Alle Table

*Design by Staffan Holm*

Staffan Holm repurposed traditional carpentry techniques for the design of the solid-oak Alle Table, which features a structural beam on the underside recalling ancient Japanese temple architecture. In this and many other ways, the Alle Table is especially Hem: traditional modes of making reclaimed for modern manufacture; good looks and practicality given equal consideration; engineering and handwork combined; quality materials used liberally. Alle means “everyone” in German, and this table is a true reflection of the design principles we cherish.

| Product name | Finish | SKU |
|---|---|---|
| **Alle Table 160 cm / 63”** | Black | 13736 |
| | Oak | 12884 |
| **Alle Table 180 cm / 71”** | Black | 13737 |
| | Oak | 12885 |
| **Alle Table 220 cm / 86.5”** | Black | 13738 |
| | Oak | 12886 |
| **Alle Table 250 cm / 98.5”** | Black | 30098 |
| | Oak | 13197 |

**Material**
*Solid Oak*
Quercus Robur
Lacquered

Wood is a natural material. The color might vary from piece to piece

**Country of origin**
Poland

**Tests & certifications**
EN 15372:2016 – L2: General use – Furniture – Strength, durability and safety – Requirements for non-domestic tables

**3D model**
3D files of all products are available on the product pages on hem.com

**Always in stock**
We keep all our products in stock and ready to ship from our warehouses in the US and EU

**Oak**
*Solid Oak*

**Black**
*Solid Oak*

**Samples**
We supply samples of all our material finishes, order them directly from hem.com/samples

**Alle Table**

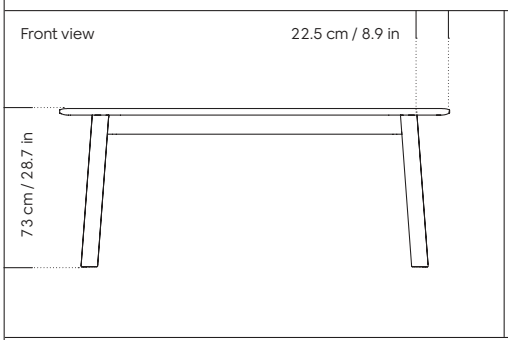


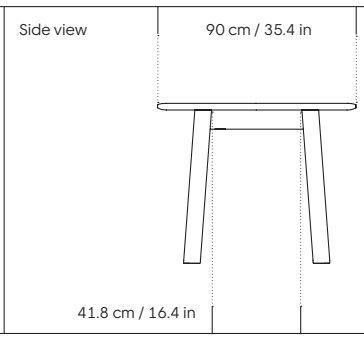


**Alle Table sizes**

**Alle Table 160 cm / 63”**

Front view

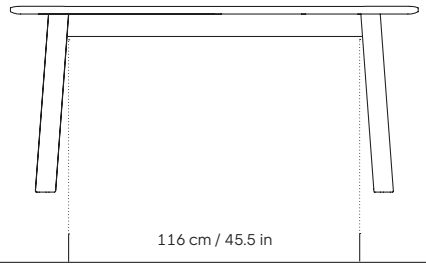


**Alle Table 180 cm / 71”**

Front view

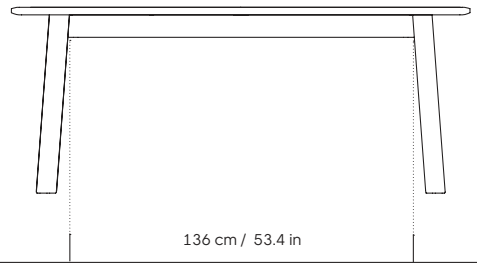


**Alle Table 220 cm / 86.5”**

Front view

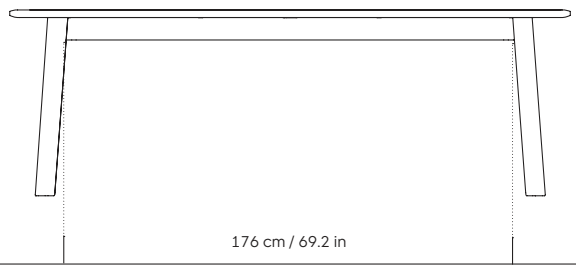


**Alle Table 250 cm / 98.5”**

Front view

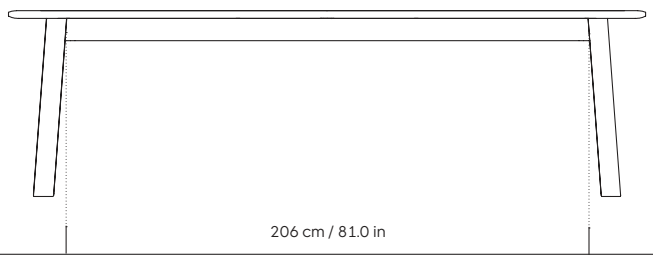

# Alle Table — Price List

| Product name | Finish | SKU | Retail Price SEK | List Price SEK (ex VAT) |
|---|---|---|---|---|
| **Curated Collection** | | | | |
| **Alle Table Conference Table 250 cm / 98 in Media** | Black Oak | 30054 | 58 639 | 47 679 |
| **Alle Table Conference Table 250 cm / 98 in Media** | Natural Oak | 12861 | 58 639 | 47 679 |
| **Alle Table Conference Table 300 cm / 118 in Media** | Black Oak | 30055 | 72 324 | 58 800 |
| **Alle Table Conference Table 300 cm / 118 in Media** | Natural Oak | 13617 | 72 324 | 58 800 |
| **Alle Table Round Table 150 cm / 59 in** | Black Oak | 30376 | 45 299 | 36 823 |
| **Alle Table Round Table 150 cm / 59 in** | Natural Oak | 30375 | 45 299 | 36 823 |
| **Alle Table Round Table 150 cm / 59 in Media** | Black Oak | 30331 | 45 299 | 36 823 |
| **Alle Table Round Table 150 cm / 59 in Media** | Natural Oak | 30217 | 45 299 | 36 823 |
| **Alle Table Table 160 cm / 63 in** | Black Oak | 13736 | 31 269 | 25 427 |
| **Alle Table Table 160 cm / 63 in** | Natural Oak | 12884 | 31 269 | 25 427 |
| **Alle Table Table 180 cm / 71 in** | Black Oak | 13737 | 32 419 | 26 358 |
| **Alle Table Table 180 cm / 71 in** | Natural Oak | 12885 | 32 419 | 26 358 |
| **Alle Table Table 220 cm / 86.6 in** | Black Oak | 13738 | 37 364 | 30 372 |
| **Alle Table Table 220 cm / 86.6 in** | Natural Oak | 12886 | 37 364 | 30 372 |
| **Alle Table Table 250 cm / 98 in** | Black Oak | 30098 | 45 299 | 36 823 |
| **Alle Table Table 250 cm / 98 in** | Natural Oak | 13197 | 45 299 | 36 823 |

# Bookmatch Table

*Design by Philippe Malouin*

The Bookmatch Table by Philippe Malouin channels the natural beauty of freshly sawn timber. It celebrates craftsmanship, and yet is a design for modern manufacture and contemporary living. Featuring two perfectly mirrored wood veneer boards with edges engineered to give a waney (untrimmed) effect and a construction that locks with two wooden wedges, the Bookmatch Table is a perfectly considered homage to traditional carpentry skills. Visually hefty, although actually light, and seemingly raw and crafted, but in reality highly engineered, the Bookmatch Table is a sophisticated piece of furniture for design devotees.

**Material**
*Oak Veneer*
Quercus Robur
Lacquered

*Walnut Veneer*
Juglans Nigra
Lacquered

Wood is a natural material. The color might vary from piece to piece

**Country of origin**
Estonia

**Tests & certifications**
Bookmatch Tables Oak: EN 15372:2016 – L2: General use. Furniture – Strength, durability and safety – Requirements for non-domestic tables.

**Oak**
*Oak Veneer*

**Walnut**
*Walnut Veneer*

**Samples**
We supply samples of our material finishes. You can order them directly from hem.com/samples

**MTO**
Please refer to the price list or reach out to your local representative for our made-to-order options

**Bookmatch Table 220 cm / 86.6”**

Front view

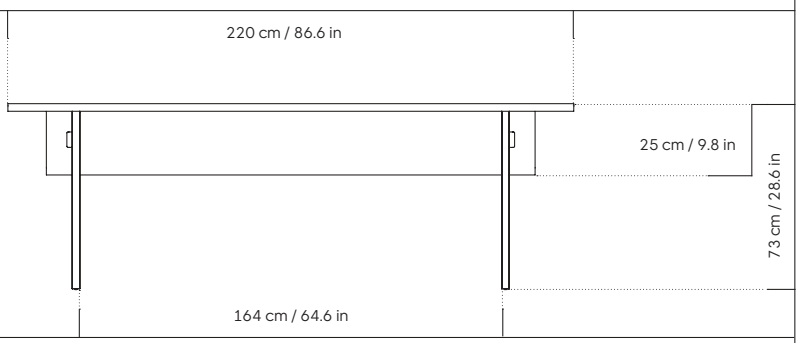


**Bookmatch Table 275 cm / 108.3”**

Front view

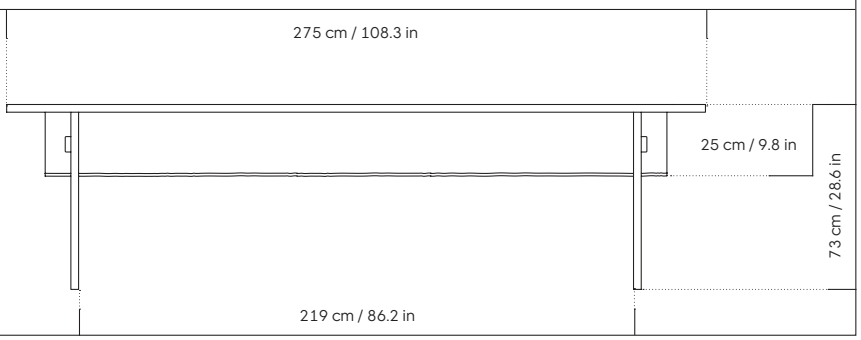

**3D model**
3D files of all products are available on the product pages on hem.com

**Bookmatch Table sizes**

Top view

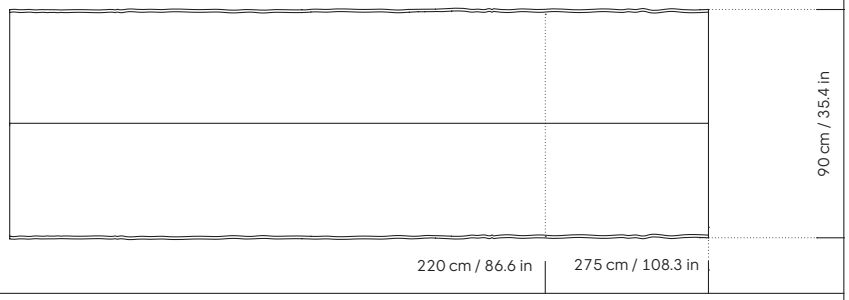


**Chairs per table**
The Bookmatch Table 220 cm / 86.6" fits up to 6 chairs. We are using the Udon Chair as a reference.

**Bookmatch Table 220 cm / 86.6"**

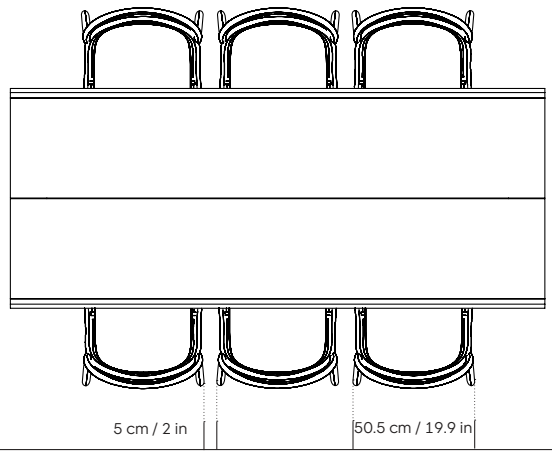


The Bookmatch Table 275 cm / 108.3" fits up to 8 chairs. We are using the Udon Chair as a reference.

**Bookmatch Table 275 cm / 108.3"**

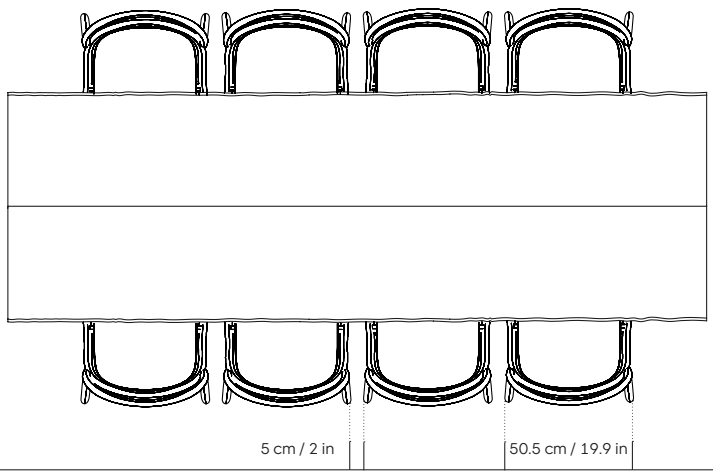

# Bookmatch Bench

*Design by Philippe Malouin*

The Bookmatch Bench by Philippe Malouin channels the natural beauty of freshly sawn timber. It celebrates craftsmanship, and yet is a design for modern manufacture and contemporary living. Featuring a perfectly mirrored wood veneer board with edges engineered to give a waney (untrimmed) effect and a construction that locks with two wooden wedges, the Bookmatch Bench is a perfectly considered homage to traditional carpentry skills. Visually hefty, although actually light, and seemingly raw and crafted, but in reality highly engineered, the Bookmatch Bench is a sophisticated piece of furniture for design devotees.

**Material**
*Oak Veneer*
Quercus Robur
Lacquered

*Walnut Veneer*
Juglans Nigra
Lacquered

Wood is a natural material. The color might vary from piece to piece

**Country of origin**
Estonia

**3D model**
3D files of all products are available on the product pages on hem.com

**Oak**
*Oak Veneer*

**Walnut**
*Walnut Veneer*

**Samples**
We supply samples of our material finishes. You can order them directly from hem.com/samples

**MTO**
Please refer to the price list or reach out to your local representative for our made-to-order options

**Bookmatch Bench**

Front view

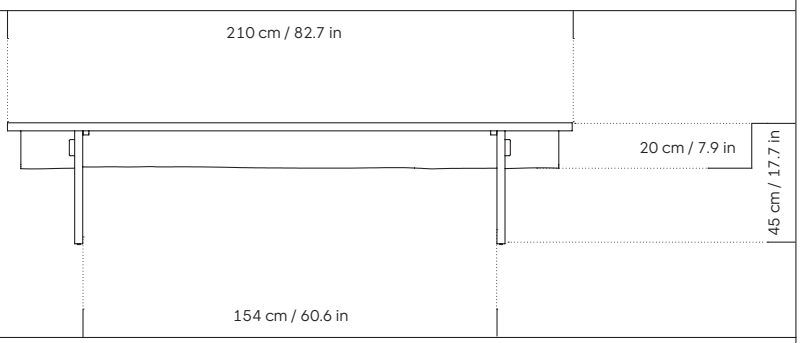


**Bookmatch Bench**

Side view

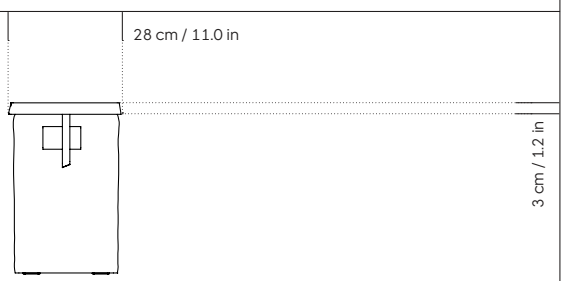

# Bookmatch Table & Bench — Price List

| Product name | Finish | SKU | Retail Price SEK | List Price SEK (ex VAT) |
|---|---|---|---|---|
| **Curated Collection** | | | | |
| **Bookmatch Bench 210 cm / 82.7 in** | Oak | 30484 | 18 044 | 14 674 |
| **Bookmatch Bench 210 cm / 82.7 in** | Walnut | 30483 | 21 839 | 17 756 |
| **Bookmatch Table 220 cm / 86.6 in** | Oak | 14156 | 36 904 | 30 004 |
| **Bookmatch Table 220 cm / 86.6 in** | Walnut | 30481 | 41 274 | 33 557 |
| **Bookmatch Table 220 cm / 86.6 in + Benches** | Oak | 20261 | 64 504 | 52 440 |
| **Bookmatch Table 220 cm / 86.6 in + Benches** | Walnut | 20263 | 77 729 | 63 193 |
| **Bookmatch Table 275 cm / 108.3 in** | Oak | 14157 | 44 609 | 36 271 |
| **Bookmatch Table 275 cm / 108.3 in** | Walnut | 30482 | 50 474 | 41 032 |
| **Bookmatch Table 275 cm / 108.3 in + Benches** | Oak | 20262 | 74 394 | 60 479 |
| **Bookmatch Table 275 cm / 108.3 in + Benches** | Walnut | 20264 | 85 434 | 69 460 |

# Chop Table Round

*Design by Philippe Malouin*

The Chop Table by Philippe Malouin is an evergreen design conceived for use in a range of public and private outdoor spaces. Intentionally simple, in both construction and aesthetics, the Chop collection reimagines classic archetypes to create pieces that are immediately recognizable, yet pleasingly unknown. The Chop table has a central rectangular column and a four-pronged base. It is heavily influenced by Malouin's work in the art world, where he often utilizes hand-led industrial techniques to develop elegant paired-back forms. The table is available with a square or round top, and is suitable for a range of different spaces and layouts. Chop is made from a durable stainless steel, and is available in a powder-coated colored finish.

**Color variants material**
*Stainless Steel*
Powder Coated

**Product weight**
22 kg / 48.5 lb

**Country of origin**
Poland

**Tests & certifications**
EN 15372:2016 – L2: General use - Furniture – Strength, durability and safety – Requirements for non-domestic tables

ANSI/BIFMA X5.5-2021 American National Standard For Office Furnishings – Desk and Table Products

**3D model**
3D files of all products are available on the product pages on hem.com

**Beige (RAL 1001)**
*Powder Coated Steel*

**Black Green (RAL 6012)**
*Powder Coated Steel*

**Grey White (RAL 9002)**
*Powder Coated Steel*

**Ultramarine Blue (RAL 5002)**
*Powder Coated Steel*

**MTO**
Please refer to the price list or reach out to your local representative for our made-to-order options

**Chop Table Round**

Front view

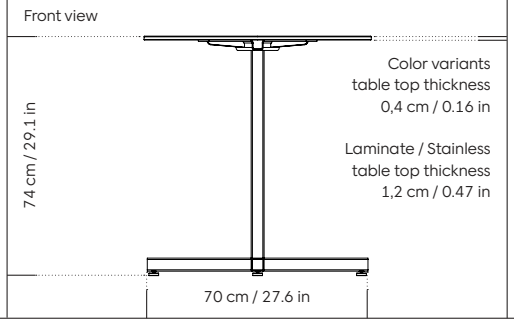


Top view

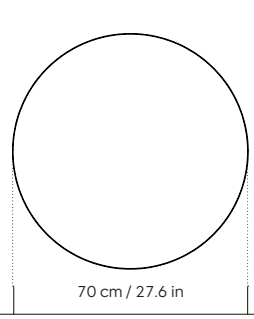

# Chop Table Square

*Design by Philippe Malouin*

The Chop Table by Philippe Malouin is an evergreen design conceived for use in a range of public and private outdoor spaces. Intentionally simple, in both construction and aesthetics, the Chop collection reimagines classic archetypes to create pieces that are immediately recognizable, yet pleasingly unknown. The Chop table has a central rectangular column and a four-pronged base. It is heavily influenced by Malouin's work in the art world, where he often utilizes hand-led industrial techniques to develop elegant paired-back forms. The table is available with a square or round top, and is suitable for a range of different spaces and layouts. Chop is made from a durable stainless steel, and is available in a powder-coated colored finish.

**Color variants material**
*Stainless Steel*
Powder Coated

**Product weight**
25 kg / 55.1 lb

**Country of origin**
Poland

**Tests & certifications**
EN 15372:2016 – L2: General use - Furniture – Strength, durability and safety – Requirements for non-domestic tables

ANSI/BIFMA X5.5-2021 American National Standard For Office Furnishings – Desk and Table Products

**3D model**
3D files of all products are available on the product pages on hem.com

**Beige (RAL 1001)**
*Powder Coated Steel*

**Black Green (RAL 6012)**
*Powder Coated Steel*

**Grey White (RAL 9002)**
*Powder Coated Steel*

**Ultramarine Blue (RAL 5002)**
*Powder Coated Steel*

**MTO**
Please refer to the price list or reach out to your local representative for our made-to-order options

**Chop Table Square**

Front view

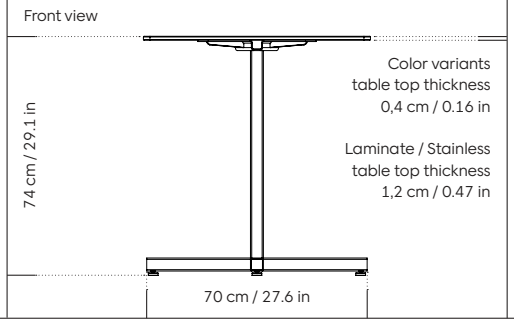


Top view

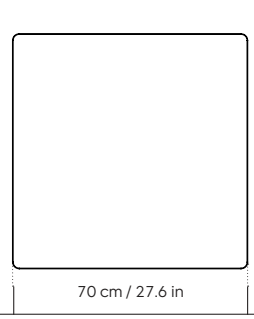

# Chop Table Rectangular

*Design by Philippe Malouin*

The Chop Table Rectangular by Philippe Malouin is an evergreen design conceived for use in a range of public and private outdoor spaces. Intentionally simple, in both construction and aesthetics, the Chop collection reimagines classic archetypes to create pieces that are immediately recognizable, yet pleasingly unknown. The Chop Table Rectangular has two central square columns and two-pronged bases. It is heavily influenced by Malouin's work in the art world, where he often utilizes hand-led industrial techniques to develop elegant paired-back forms. Chop Table Rectangular is made from a durable stainless steel and comes in a powder-coated colored finish.

**Color variants material**
Powder Coated

**Stainless variant material**
*Leg material*
*Stainless Steel*

*Table top material*
*Stainless Steel*

**Product weight**
49 kg / 108 lb

**Country of origin**
Poland

**Tests & certifications**
EN 15372:2016 – L2: General use - Furniture – Strength, durability and safety – Requirements for non-domestic tables

ANSI/BIFMA X5.5-2021 American National Standard For Office Furnishings – Desk and Table Products

**3D model**
3D files of all products are available on the product pages on hem.com

**Black Green (RAL 6012)**
*Powder Coated Steel*

**MTO**
Reach out to your local representative for the full selection of made-to-order options.

**Chop Table Square**

Side view

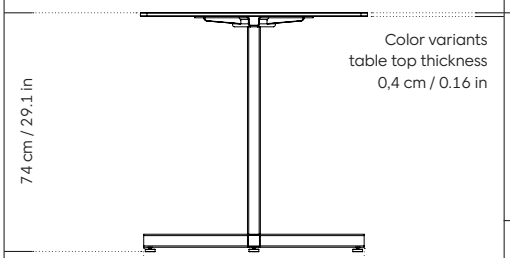


Top view

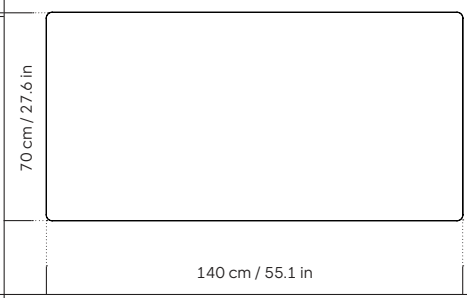


Front view

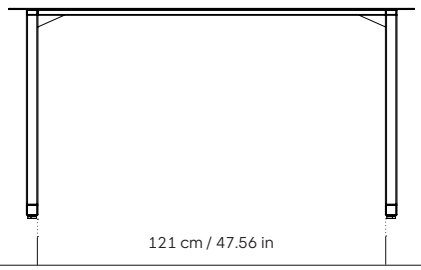

# Chop Bar Table

*Design by Philippe Malouin*

The Chop Table by Philippe Malouin is an evergreen design conceived for use in a range of public and private outdoor spaces. Intentionally simple, in both construction and aesthetics, the Chop collection reimagines classic archetypes to create pieces that are immediately recognizable, yet pleasingly unknown. The Chop table has a central rectangular column and a four-pronged base. It is heavily influenced by Malouin's work in the art world, where he often utilizes hand-led industrial techniques to develop elegant paired-back forms. The table is suitable for a range of different spaces and layouts. Chop is made from a durable stainless steel, and is available in a powder-coated colored finish.

**Color variants material**
*Stainless Steel*
Powder Coated

**Product weight**
8 kg / 17.6 lb

**Country of origin**
Poland

**Tests & certifications**
EN 16139:2013 – L2: Extreme use - Furniture - Strength durability and safety - Requirements for non-domestic seating

ANSI/BIFMA X5.1-2017 American National Standard For Office Furnishings – General Purpose Office Chairs

**3D model**
3D files of all products are available on the product pages on hem.com

**Black Green (RAL 6012)**
*Powder Coated Steel*

**MTO**
Please refer to the price list or reach out to your local representative for our made-to-order options

**Chop Bar Table Round**

Front view

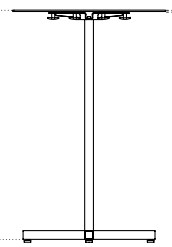


Color variants
table top thickness
0,4 cm / 0.16 in

Laminate / Stainless
table top thickness
1,2 cm / 0.47 in

Top view

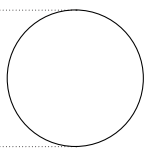

# Chop Counter Table

*Design by Philippe Malouin*

The Chop Table by Philippe Malouin is an evergreen design conceived for use in a range of public and private outdoor spaces. Intentionally simple, in both construction and aesthetics, the Chop collection reimagines classic archetypes to create pieces that are immediately recognizable, yet pleasingly unknown. The Chop table has a central rectangular column and a four-pronged base. It is heavily influenced by Malouin's work in the art world, where he often utilizes hand-led industrial techniques to develop elegant paired-back forms. The table is suitable for a range of different spaces and layouts. Chop is made from a durable stainless steel, and is available in a powder-coated colored finish.

**Color variants material**
*Stainless Steel*
Powder Coated

**Product weight**
8 kg / 17.6 lb

**Country of origin**
Poland

**Tests & certifications**
EN 16139:2013 – L2: Extreme use - Furniture - Strength durability and safety - Requirements for non-domestic seating

ANSI/BIFMA X5.1-2017 American National Standard For Office Furnishings – General Purpose Office Chairs

**3D model**
3D files of all products are available on the product pages on hem.com

**Black Green (RAL 6012)**
*Powder Coated Steel*

**MTO**
Please refer to the price list or reach out to your local representative for our made-to-order options

**Chop Counter Table Round**

Front view

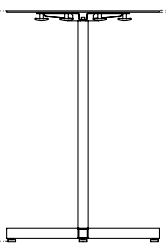


Color variants
table top thickness
0,4 cm / 0.16 in

Laminate / Stainless
table top thickness
1,2 cm / 0.47 in

Top view

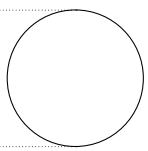

# Chop Table — Price List

| Product name | Finish | SKU | Retail Price SEK | List Price SEK (ex VAT) |
|---|---|---|---|---|
| **Curated Collection** | | | | |
| **Chop Bar Table Round** | Black Green | 31318 | 8 729 | 7 096 |
| **Chop Counter Table Round** | Black Green | 31313 | 8 729 | 7 096 |
| **Chop Table Rectangular** | Black Green | 50521 | 17 009 | 13 823 |
| **Chop Table Round** | Beige | 30730 | 8 729 | 7 096 |
| **Chop Table Round** | Black Green | 30732 | 8 729 | 7 096 |
| **Chop Table Round** | Grey White | 30733 | 8 729 | 7 096 |
| **Chop Table Round** | Ultramarine Blue | 30731 | 8 729 | 7 096 |
| **Chop Table Square** | Beige | 30726 | 8 729 | 7 096 |
| **Chop Table Square** | Black Green | 30728 | 8 729 | 7 096 |
| **Chop Table Square** | Grey White | 30729 | 8 729 | 7 096 |
| **Chop Table Square** | Ultramarine Blue | 30727 | 8 729 | 7 096 |

# Log Table

*Design by Julien Renault*

The Log Table is archetypal, its clean lines and refined silhouette contrived by designer Julien Renault, whose intention was to make a quintessential table for work or play. Its streamlined design cleverly conceals its engineering: a veneer-covered honeycomb core keeps the tabletop light, allowing it to span a great distance. Purposefully robust legs anchor the table and give it stability, and their simple screw connections make assembly straightforward. The ever-so-pleasing curved edge and rounded lines of the legs gently soften the overall effect.

**Tabletop Material**
*Oak Veneer*
Quercus Robur
Lacquered

*Walnut Veneer*
Juglans Nigra
Lacquered

**Leg Material**
*Solid Oak*
Quercus Robur
Lacquered

*Solid Walnut*
Juglans Nigra
Lacquered

Wood is a natural material why the color may vary slightly from piece to piece

**Country of origin**
Estonia

**Tests & certifications**
EN 15372:2016 – L2: General use – Furniture – Strength, durability and safety – Requirements for non-domestic tables

**3D model**
3D files of all products are available on the product pages on hem.com

**Oak**
*Oak Veneer / Solid Oak*

**Walnut**
*Walnut Veneer / Solid Walnut*

**Samples**
We supply samples of our material finishes. You can order them directly from hem.com/samples

**MTO**
Please refer to the price list or reach out to your local representative for our made-to-order options

**Log Table**

**Log Table sizes**

**Log Table**

Side view

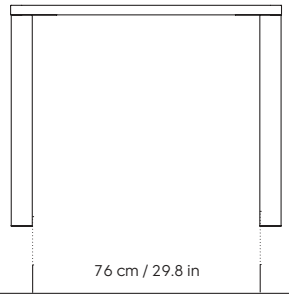


**Log Table 140 cm / 55”**

Front view

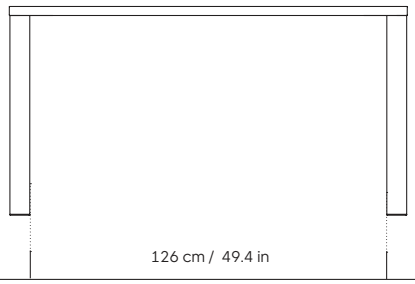


**Log Table 180 cm / 71”**

Front view

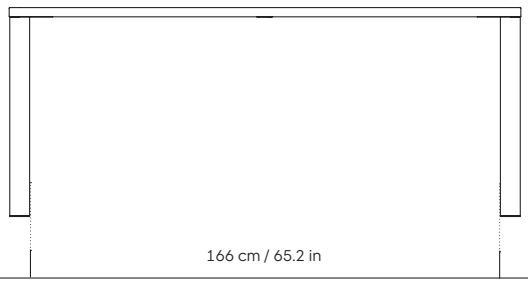


**Log Table 220 cm / 86.5”**

Front view

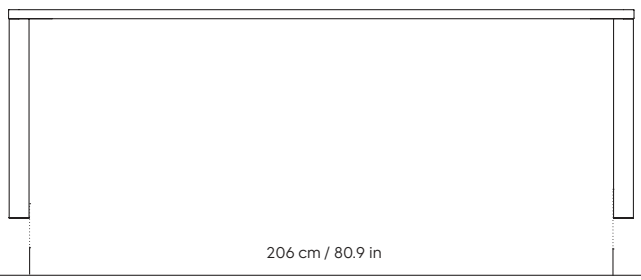

**Chairs per table**

The Log Table 140 cm / 55" fits up to 4 chairs.
We are using the Udon Chair as a reference.

**Log Table 140 cm / 55"**

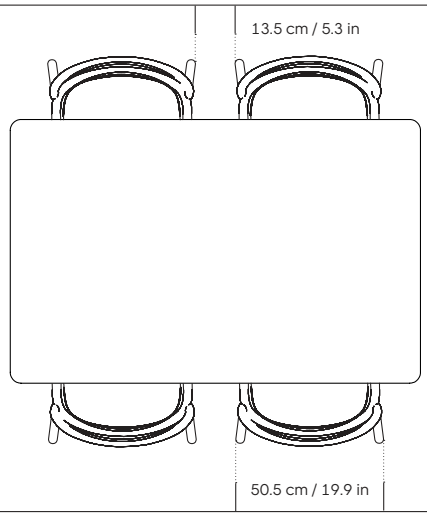


The Log Table 180 cm / 71" fits up to 6 chairs.
We are using the Udon Chair as a reference.

**Log Table 180 cm / 71"**

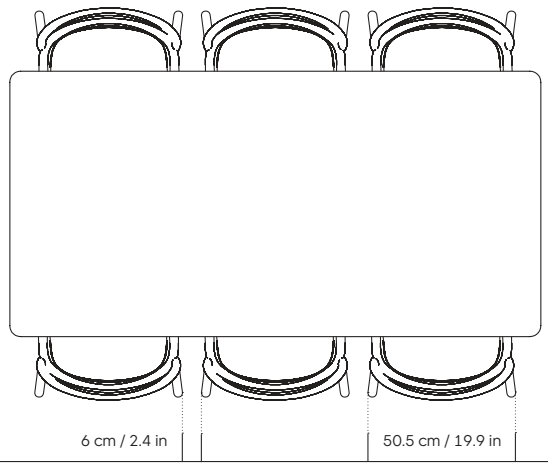


The Log Table 220 cm / 86.5" fits up to 6 chairs.
We are using the Udon Chair as a reference.

**Log Table 220 cm / 86.5"**

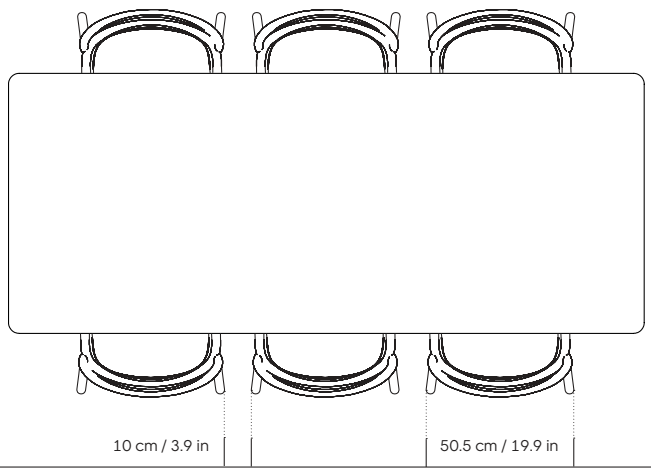

# Log Table — Price List

| Product name | Finish | SKU | Retail Price SEK | List Price SEK (ex VAT) |
|---|---|---|---|---|
| **Curated Collection** | | | | |
| **Log Table 140 cm / 55 in** | Oak | 30063 | 18 849 | 15 330 |
| **Log Table 140 cm / 55 in** | Walnut | 31653 | 27 244 | 22 149 |
| **Log Table 180 cm / 71 in** | Oak | 14195 | 22 299 | 18 124 |
| **Log Table 180 cm / 71 in** | Walnut | 31649 | 29 314 | 23 828 |
| **Log Table 220 cm / 86.6 in** | Oak | 14196 | 25 864 | 21 022 |
| **Log Table 220 cm / 86.6 in** | Walnut | 31651 | 31 729 | 25 795 |

# Lolly Side Table

*Design by Pauline Deltour*

The Lolly Side Table is the perfect grab-and-go piece of furniture. Although diminutive in stature, the Lolly is big in versatility and character. Place it next to sofas as a prop for your cup of tea or book, beside beds and armchairs or as an impromptu laptop stand. Most of all make use of its mobile nature; Lolly can be wherever you need it to be. The table's leg is hollow, meaning you can hide messy lamp or charging cables within it and its foot is designed to slide beneath your sofa or chair so that Lolly hugs the side of your furniture, saving space and integrating effortlessly. Lolly is made from sheet steel and is available in a powder-coated finish as well as a unique ripple-effect textured finish for added interest and extra durability.

**Material**
*Carbon steel*
Gloss Leatherette Powder Coat
Powder Coated

**Country of origin**
Italy

**Black Green Leatherette (RAL 6012)**
*Powder Coated Carbon Steel*

**Ochre Yellow Leatherette (RAL 1024)**
*Powder Coated Carbon Steel*

**Pure White Leatherette (RAL 9010)**
*Powder Coated Carbon Steel*

**Traffic Red Leatherette (RAL 3020)**
*Powder Coated Carbon Steel*

**Black Grey (RAL 7021)**
*Powder Coated Carbon Steel*

**Cream (RAL 9001)**
*Powder Coated Carbon Steel*

**Samples**
We supply samples of our material finishes. You can order them directly from hem.com/samples

**MTO**
Please refer to the price list or reach out to your local representative for our made-to-order options

**Lolly Side Table**

Side view

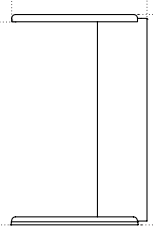

# Lolly Side Table — Price List

| Product name | Finish | SKU | Retail Price SEK | List Price SEK (ex VAT) |
|---|---|---|---|---|
| **Curated Collection** | | | | |
| **Lolly Side Table** | Black Green Gloss | 30588 | 5 279 | 4 290 |
| **Lolly Side Table** | Ochre Yellow Gloss | 30586 | 5 279 | 4 290 |
| **Lolly Side Table** | Pure White Gloss | 30587 | 5 279 | 4 290 |
| **Lolly Side Table** | Traffic Red Gloss | 31040 | 5 279 | 4 290 |

# Max Table

*Design by Max Lamb*

There can be little doubt that the Max Table is furniture that will endure. Boasting extreme length and made from solid ash, this extraordinary and uncompromising design is closer to architecture than object. Designer Max Lamb was given the brief to make a table so strong and so generous, it could be stood upon. He delivered a design that is monolithic, bold, and consequential. Huge in scale, elementary in form, brilliant in construction, the Max Table (and its partner, the Max Bench) will be your home's centerpiece—the hub around which you and yours gather for generations to come

| Product name | Finish | SKU | Product name | Finish | SKU |
|---|---|---|---|---|---|
| **Max Table 300 cm / 118 in** | Ash | 30600 | **Max Table 300 cm / 118 in** | Black Stained Ash | 31700 |
| **Max Table 250 cm / 98.4 in** | Ash | 30604 | **Max Table 250 cm / 98.4 in** | Black Stained Ash | 31710 |

**Material**
*Solid Ash*
Fraxinus Excelsior
Clear Lacquered
Black Stained

Wood is a natural material. The color might vary from piece to piece.

**Country of origin**
Poland

**3D model**
3D files of all products are available on the product pages on hem.com

**Product accessory**
Max Bench 300 cm / 118 in
Max Bench 250 cm / 98.4 in

**Always in stock**
We keep all our products in stock and ready to ship from our warehouses in the US and EU

**Ash**
*Solid Ash*

**Ash**
*Black Stained*

**Samples**
We supply samples of our material finishes. You can order them directly from hem.com/samples

**MTO**
Please refer to the price list or reach out to your local representative for our made-to-order options

**Max Table 300 cm / 118 in**

Top view

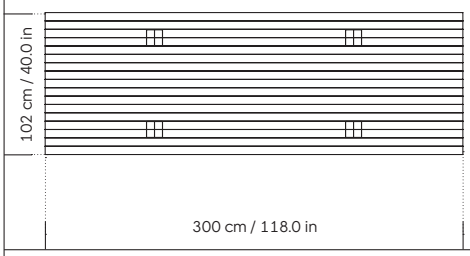


Side view

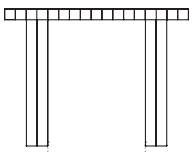


Front view

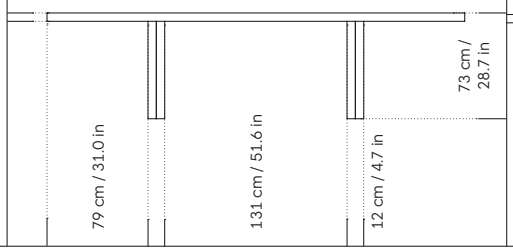


**Max Table 250 cm / 98.4 in**

Top view

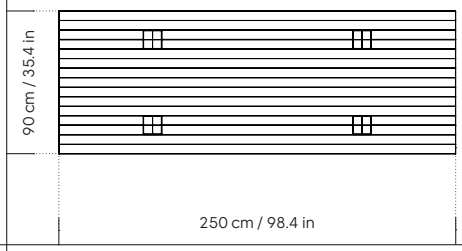


Side view

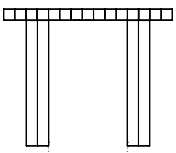


Front view

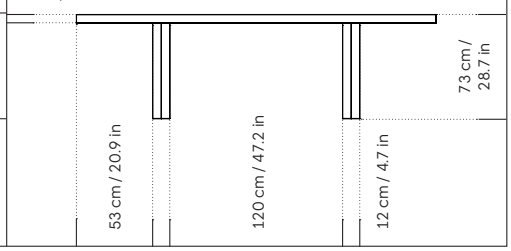

| **Chair per table**<br>The Max Table fits up to 8 chairs.<br>We are using the Udon Chair as reference. | **Max Table 300 cm / 118 in** | **Max Table 250 cm / 98.4 in** |
|---|---|---|
| | 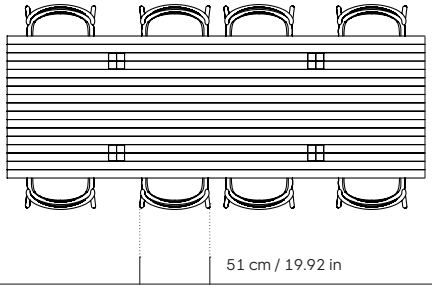 | 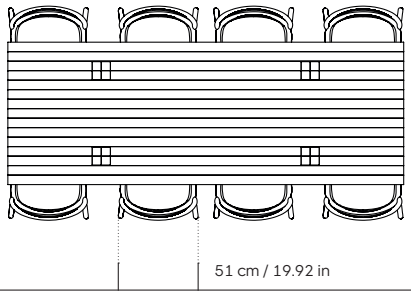 |

# Max Bench

*Design by Max Lamb*

Just like the Max Table, to which this seat is a partner, the Max Bench is a formidable piece of furniture: huge in scale, elementary in form, brilliant in construction, and made from solid ash. Use the bench as it was intended—alongside the Max Table for a fierce dining set—or be unconventional and use it as a monumental stand-alone piece on which to sit, store books, or display favorite possessions. The Max furniture family embodies its name in every way. Created by one of contemporary design's finest talents, Max Lamb.

| Product name | Finish | SKU | Product name | Finish | SKU |
|---|---|---|---|---|---|
| **Max Bench 300 cm / 118 in** | Ash | 30387 | **Max Bench 300 cm / 118 in** | Black Stained Ash | 31703 |
| **Max Bench 250 cm / 98.4 in** | Ash | 30608 | **Max Bench 250 cm / 98.4 in** | Black Stained Ash | 31706 |

**Material**
*Solid Ash*
Fraxinus Excelsior
Clear Lacquered
Black Stained

Wood is a natural material. The color might vary from piece to piece

**Country of origin**
Poland

**3D model**
3D files of all products are available on the product pages on hem.com

**Product accessory**
Max Table 300 cm / 118 in
Max Table 250 cm / 98.4 in

**Always in stock**
We keep all our products in stock and ready to ship from our warehouses in the US and EU

**Ash**
*Solid Ash*

**Ash**
*Black Stained*

**Samples**
We supply samples of our material finishes. You can order them directly from hem.com/samples

**MTO**
Please refer to the price list or reach out to your local representative for our made-to-order options

**Max Bench 300 cm / 118 in**

Top view

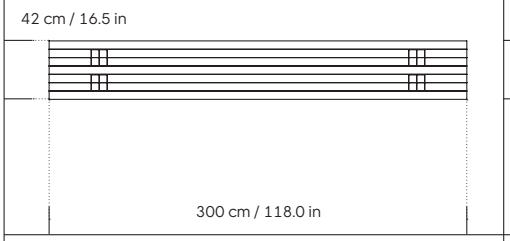


Side view

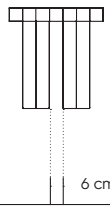


Front view

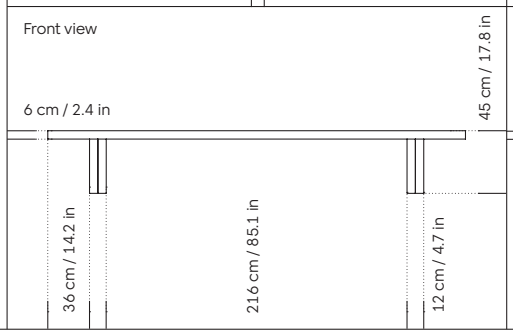


**Max Bench 250 cm / 98.4 in**

Top view

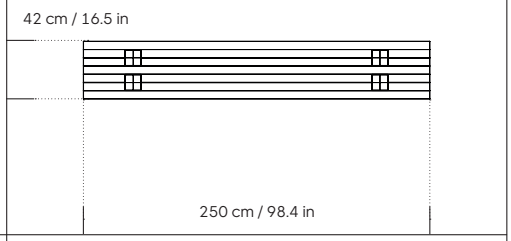


Side view

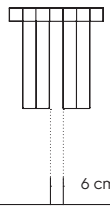


Front view

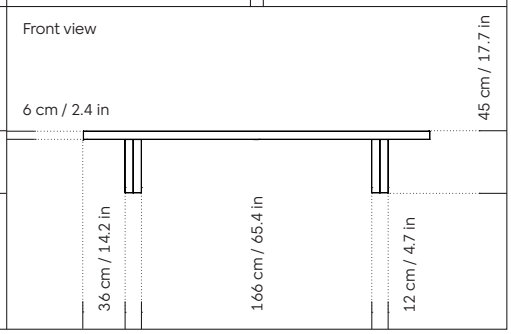

# Max Table & Bench — Price List

| Product name | Finish | SKU | Retail Price SEK | List Price SEK (ex VAT) |
|---|---|---|---|---|
| **Curated Collection** | | | | |
| **Max Bench 250 cm / 98.4 in** | Ash | 30608 | 38 744 | 31 499 |
| **Max Bench 250 cm / 98.4 in** | Black Stained Ash | 31706 | 38 744 | 31 499 |
| **Max Bench 300 cm / 118 in** | Ash | 30387 | 42 309 | 34 397 |
| **Max Bench 300 cm / 118 in** | Black Stained Ash | 31703 | 42 309 | 34 397 |
| **Max Table + Benches 250 cm / 98.4 in** | Ash | 20454 | 140 749 | 114 425 |
| **Max Table + Benches 250 cm / 98.4 in** | Black Stained Ash | 31749 | 140 749 | 114 425 |
| **Max Table + Benches 300 cm / 118 in** | Ash | 20117 | 152 479 | 123 970 |
| **Max Table + Benches 300 cm / 118 in** | Black Stained Ash | 31750 | 152 479 | 123 970 |
| **Max Table 250 cm / 98.4 in** | Ash | 30604 | 70 369 | 57 213 |
| **Max Table 250 cm / 98.4 in** | Black Stained Ash | 31710 | 70 369 | 57 213 |
| **Max Table 300 cm / 118 in** | Ash | 30600 | 77 499 | 63 009 |
| **Max Table 300 cm / 118 in** | Black Stained Ash | 31700 | 77 499 | 63 009 |

# Worm Coffee Table

*Design by Soft Baroque*

Effortless additions to any interior, the Worm family of occasional tables is a certified crowd pleaser. Soft Baroque has created three solid wood tabletops for this playful series, their real-life shapes inspired by digital drawing tools. Worm Tables can feel classic or fresh depending on their context, with solid wood legs taking the design in a refined and tactile direction. Use Worm alone as a hero side table or en masse for a landscape of expressive surface space. This light-on-its-feet table brings an accent of easy charm to any room. Worm tabletops are available in three shapes and two wood finishes: natural beech and brown stain, and are paired with solid wood legs.

**Material**
Solid Beech
*Acrylic lacquer*

**Country of origin**
Poland

**Tests & certifications**
EN 15372:2016 – L2: General use - Furniture – Strength, durability and safety – Requirements for non-domestic tables, FSC 100%

**Beech**
*Natural Lacquered*

**Brown**
*Brown Stained*

**Worm Coffee Table Large - Table top**

Top view

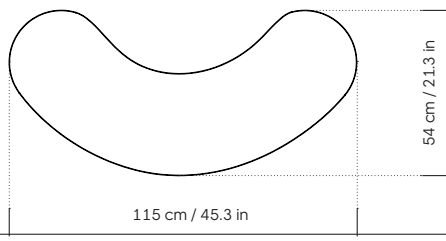


**Worm Coffee Table Large - Wood legs**

Front view

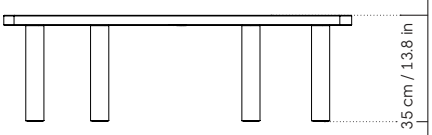

# Worm Coffee Table Round

*Design by Soft Baroque*

Effortless additions to any interior, the Worm family of occasional tables is a certified crowd pleaser. Soft Baroque has created three solid wood tabletops for this playful series, their real-life shapes inspired by digital drawing tools. Worm Tables can feel classic or fresh depending on their context, with solid wood legs taking the design in a refined and tactile direction. Use Worm alone as a hero side table or en masse for a landscape of expressive surface space. This light-on-its-feet table brings an accent of easy charm to any room. Worm tabletops are available in three shapes and two wood finishes: natural beech and brown stain, and are paired with solid wood legs.

**Material**
Solid Beech
*Acrylic lacquer*

**Country of origin**
Poland

**Tests & certifications**
EN 15372:2016 – L2: General use - Furniture – Strength, durability and safety – Requirements for non-domestic tables, FSC 100%

**Beech**
*Natural Lacquered*

**Brown**
*Brown Stained*

**Worm Coffee Table Round - Table top**

Top view

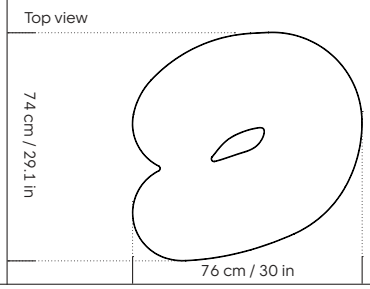


**Worm Coffee Table Round - Wood legs**

Front view

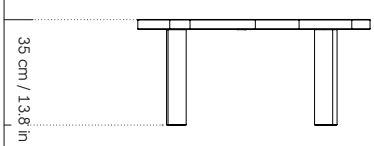

# Worm Coffee Table Small

*Design by Soft Baroque*

Effortless additions to any interior, the Worm family of occasional tables is a certified crowd pleaser. Soft Baroque has created three solid wood tabletops for this playful series, their real-life shapes inspired by digital drawing tools. Worm Tables can feel classic or fresh depending on their context, with solid wood legs taking the design in a refined and tactile direction. Use Worm alone as a hero side table or en masse for a landscape of expressive surface space. This light-on-its-feet table brings an accent of easy charm to any room. Worm tabletops are available in three shapes and two wood finishes: natural beech and brown stain, and are paired with solid wood legs.

**Material**
Solid Beech
*Acrylic lacquer*

**Country of origin**
Poland

**Tests & certifications**
EN 15372:2016 – L2: General use - Furniture – Strength, durability and safety – Requirements for non-domestic tables, FSC 100%

**Beech**
*Natural Lacquered*

**Brown**
*Brown Stained*

**Worm Coffee Table Small - Table top**

Top view

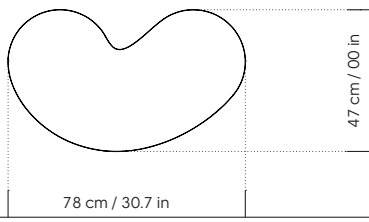


**Worm Coffee Table Small - Wood legs**

Front view

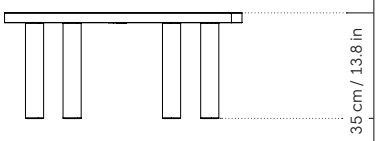

# Worm Coffee Tables — Price List

| Product name | Finish | SKU | Retail Price SEK | List Price SEK (ex VAT) |
|---|---|---|---|---|
| **Curated Collection** | | | | |
| **Worm Coffee Table Large** | Beech/Beech | 31372 | 8 269 | 6 728 |
| **Worm Coffee Table Large** | Beech/Brown | 31373 | 8 269 | 6 728 |
| **Worm Coffee Table Large** | Brown/Beech | 31375 | 8 269 | 6 728 |
| **Worm Coffee Table Large** | Brown/Brown | 31376 | 8 269 | 6 728 |
| **Worm Coffee Table Round** | Beech/Beech | 31378 | 8 844 | 7 188 |
| **Worm Coffee Table Round** | Beech/Brown | 31379 | 8 844 | 7 188 |
| **Worm Coffee Table Round** | Brown/Beech | 31381 | 8 844 | 7 188 |
| **Worm Coffee Table Round** | Brown/Brown | 31382 | 8 844 | 7 188 |
| **Worm Coffee Table Small** | Beech/Beech | 31384 | 7 694 | 6 256 |
| **Worm Coffee Table Small** | Beech/Brown | 31385 | 7 694 | 6 256 |
| **Worm Coffee Table Small** | Brown/Beech | 31387 | 7 694 | 6 256 |
| **Worm Coffee Table Small** | Brown/Brown | 31388 | 7 694 | 6 256 |

# Lighting

**How to light your home or workspace is one of the most consequential interior decisions. We've created systems that allow our customers to take the lead and create their own lighting designs and compositions.**

# Alphabeta Floor Lamp

*Design by Luca Nichetto*

Variety and flexibility are at the heart of the modular Alphabeta lighting system by Luca Nichetto. Eight different shade shapes in eight powder-coated colors equate to a plethora of possibilities—1024 to be exact. Whatever your aesthetic, from strict and somber all-black to playful and flamboyant color combinations, sharp lines or voluptuous forms, Alphabeta can accommodate them all. Alphabeta are bidirectional—meaning they emit light from both the top and the bottom of the shade—so that you need not choose between spotlight and ambient light but can enjoy both. The Alphabeta Floor Lamp consists of our modular shade on top of a slender, gently angled metal stand. The stand is weighted for stability and adjustable for ultimate accurate control. Every turned-steel shade and milled part is made in Italy.

| Product name | Finish | SKU |
|---|---|---|
| **Alphabeta Floor Lamp Base (EU)** | Black | 20034 |
| **Alphabeta Floor Lamp Base (UK)** | Black | 20076 |
| **Alphabeta Floor Lamp Base (US)** | Black | 20091 |
| **Alphabeta Shade Cone Large** | Jet Black | 13313 |
| **Alphabeta Shade Cone Large** | Signal White | 13314 |
| **Alphabeta Shade Cone Large** | Luminous Green | 20253 |
| **Alphabeta Shade Cone Large** | Silk Grey | 20252 |
| **Alphabeta Shade Cone Small** | Jet Black | 13309 |
| **Alphabeta Shade Cone Small** | Signal White | 13310 |
| **Alphabeta Shade Cone Small** | Soft Blue | 20368 |
| **Alphabeta Shade Cone Small** | Sulfur Yellow | 20369 |
| **Alphabeta Shade Cone Tall** | Jet Black | 13306 |
| **Alphabeta Shade Cone Tall** | Signal White | 13307 |
| **Alphabeta Shade Cone Tall** | Beige | 20254 |
| **Alphabeta Shade Cone Tall** | Ultramarine Blue | 20255 |
| **Alphabeta Shade Round Cylinder** | Jet Black | 13322 |
| **Alphabeta Shade Round Cylinder** | Light Pink | 20008 |
| **Alphabeta Shade Round Cylinder** | Signal White | 13323 |
| **Alphabeta Shade Round Cylinder** | Luminous Green | 20370 |
| **Alphabeta Shade Round Large** | Jet Black | 13300 |
| **Alphabeta Shade Round Large** | Signal White | 13301 |
| **Alphabeta Shade Round Large** | Ultramarine Blue | 20256 |
| **Alphabeta Shade Round Large** | Beige | 20257 |
| **Alphabeta Shade Round Medium** | Jet Black | 13319 |
| **Alphabeta Shade Round Medium** | Signal White | 13320 |
| **Alphabeta Shade Round Medium** | Black Green | 20371 |
| **Alphabeta Shade Round Medium** | Silk Grey | 20372 |
| **Alphabeta Shade Round Small** | Jet Black | 13303 |
| **Alphabeta Shade Round Small** | Signal White | 13304 |
| **Alphabeta Shade Round Small** | Sulfur Yellow | 20373 |
| **Alphabeta Shade Round Small** | Soft Blue | 20374 |
| **Alphabeta Shade Round Tall** | Jet Black | 13316 |
| **Alphabeta Shade Round Tall** | Light Pink | 13315 |
| **Alphabeta Shade Round Tall** | Signal White | 13317 |
| **Alphabeta Shade Round Tall** | Black Green | 20375 |

**Always in stock**
We keep all our products in stock and ready to ship from our warehouses in the US and EU

**Jet Black (RAL 9005)** *Powder Coated Steel*

**Signal White (RAL 9003)** *Powder Coated Steel*

**Luminous Green (RAL 6038)** *Powder Coated Steel*

**Silk Grey (RAL 7044)** *Powder Coated Steell*

**Beige (RAL 1001)** *Powder Coated Steel*

**Light Pink (RAL 3015)** *Powder Coated Steel*

**Ultramarine Blue (RAL 5002)** *Powder Coated Steel*

**Soft Blue (RAL 230 85 20)** *Powder Coated Steel*

**Black Green (RAL 6012)** *Powder Coated Steel*

**Sulfur Yellow (RAL 1016)** *Powder Coated Steel*

**MTO**
Please refer to the price list or reach out to your local representative for our made-to-order options

**Shade material**
*Steel*
Powder Coated
Lacquered

**Base material**
*Steel / Aluminum*
Powder Coated / Anodized

**Bulb specifications**
*Recommended for US:*
2 × G9 LED, max. 5W/120V

*Recommended for EU/UK:*
2 × G9 LED, max. 5W/230V
or 2 × G9 Halogen, max. 48W/230V

Please note that the Alphabeta lamps ship without bulbs

**Controls**
On/off floor switch on cord

**Country of origin**
Italy and China

**Tests & certifications**
CE Approved
UL Listed

**3D model**
3D files of all products are available on the product pages on hem.com

**Modularity**
This is a modular product that can be configured freely to fit your needs. Reach out to info@hem.com for assistance

**Alphabeta Shades Overview**

**Cone Small**
H: 9 cm / 3.5 in
D: 14 cm / 5.5 in

**Cone Tall**
H: 17 cm / 6.6 in
D: 14 cm / 5.5 in

**Cone Large**
H: 12 cm / 4.7 in
D: 34 cm / 13.3 in

**Round Small**
H: 8 cm / 3.1 in
D: 9 cm / 3.5 in

**Round Medium**
H: 8 cm / 3.1 in
D: 14 cm / 5.5 in

**Round Large**
H: 11 cm / 4.3 in
D: 19 cm / 7.4 in

**Round Tall**
H: 15 cm / 5.9 in
D: 16 cm / 6.2 in

**Round Cylinder**
H: 21 cm / 8.3 in
D: 8 cm / 3.1 in

**Floor Lamp Base**
H (adjustable):
150-170 cm / 59-67 in

**Alphabeta Floorlamp**

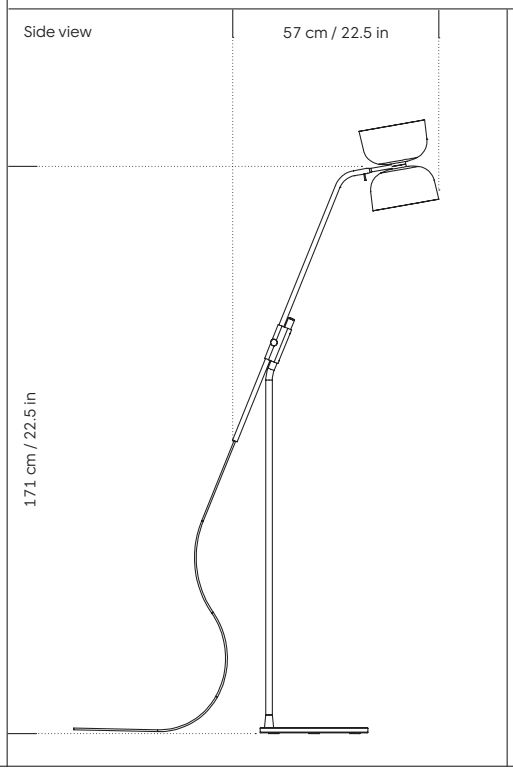


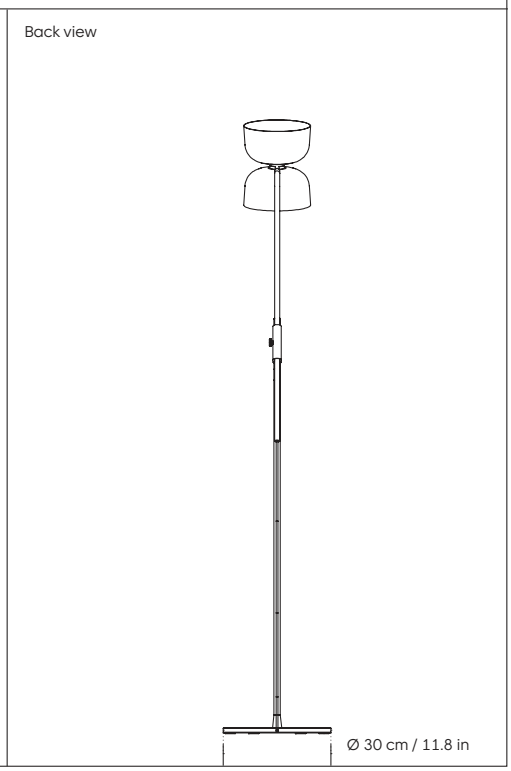

# Alphabeta Pendant Light

*Design by Luca Nichetto*

Variety and flexibility are at the heart of the modular Alphabeta lighting system by Luca Nichetto. Eight different shade shapes in a wide range of powder-coated colors equate to a plethora of possibilities—1024 to be exact. Whatever your aesthetic, from strict and somber all-black to playful and flamboyant color combinations, sharp lines or voluptuous forms, Alphabeta can accommodate them all. Alphabeta are bidirectional—meaning they emit light from both the top and the bottom of the shade—so that you need not choose between spotlight and ambient light but can enjoy both. The Alphabeta Pendant Lights hang on a metal wire, with a sinuous cable adding a curvaceous detail. Pendants can be used singularly or in groups for an impactful installation. Every turned-steel shade and milled part is made in Italy.

| Product name | Finish | SKU |
|---|---|---|
| **Alphabeta Pendant Light Standard Cable (EU/UK)** | Black | 13336 |
| **Alphabeta Pendant Light Standard Cable (US)** | Black | 13337 |
| **Alphabeta Pendant Light Extended Cable (EU/UK)** | Black | 40086 |
| **Alphabeta Pendant Light Extended Cable (US)** | Black | 40361 |
| **Alphabeta Shade Cone Large** | Jet Black | 13313 |
| **Alphabeta Shade Cone Large** | Signal White | 13314 |
| **Alphabeta Shade Cone Large** | Luminous Green | 20253 |
| **Alphabeta Shade Cone Large** | Silk Grey | 20252 |
| **Alphabeta Shade Cone Small** | Jet Black | 13309 |
| **Alphabeta Shade Cone Small** | Signal White | 13310 |
| **Alphabeta Shade Cone Small** | Soft Blue | 20368 |
| **Alphabeta Shade Cone Small** | Sulfur Yellow | 20369 |
| **Alphabeta Shade Cone Tall** | Jet Black | 13306 |
| **Alphabeta Shade Cone Tall** | Signal White | 13307 |
| **Alphabeta Shade Cone Tall** | Beige | 20254 |
| **Alphabeta Shade Cone Tall** | Ultramarine Blue | 20255 |
| **Alphabeta Shade Round Cylinder** | Jet Black | 13322 |
| **Alphabeta Shade Round Cylinder** | Light Pink | 20008 |
| **Alphabeta Shade Round Cylinder** | Signal White | 13323 |
| **Alphabeta Shade Round Cylinder** | Luminous Green | 20370 |
| **Alphabeta Shade Round Large** | Jet Black | 13300 |
| **Alphabeta Shade Round Large** | Signal White | 13301 |
| **Alphabeta Shade Round Large** | Ultramarine Blue | 20256 |
| **Alphabeta Shade Round Large** | Beige | 20257 |
| **Alphabeta Shade Round Medium** | Jet Black | 13319 |
| **Alphabeta Shade Round Medium** | Signal White | 13320 |
| **Alphabeta Shade Round Medium** | Black Green | 20371 |
| **Alphabeta Shade Round Medium** | Silk Grey | 20372 |
| **Alphabeta Shade Round Small** | Jet Black | 13303 |
| **Alphabeta Shade Round Small** | Signal White | 13304 |
| **Alphabeta Shade Round Small** | Sulfur Yellow | 20373 |
| **Alphabeta Shade Round Small** | Soft Blue | 20374 |
| **Alphabeta Shade Round Tall** | Jet Black | 13316 |
| **Alphabeta Shade Round Tall** | Light Pink | 13315 |
| **Alphabeta Shade Round Tall** | Signal White | 13317 |
| **Alphabeta Shade Round Tall** | Black Green | 20375 |

**Always in stock**
We keep all our products in stock and ready to ship from our warehouses in the US and EU

**Jet Black (RAL 9005)** *Powder Coated Steel*

**Signal White (RAL 9003)** *Powder Coated Steel*

**Luminous Green (RAL 6038)** *Powder Coated Steel*

**Silk Grey (RAL 7044)** *Powder Coated Steel*

**Beige (RAL 1001)** *Powder Coated Steel*

**Light Pink (RAL 3015)** *Powder Coated Steel*

**Ultramarine Blue (RAL 5002)** *Powder Coated Steel*

**Soft Blue (RAL 230 85 20)** *Powder Coated Steel*

**Black Green (RAL 6012)** *Powder Coated Steel*

**Sulfur Yellow (RAL 1016)** *Powder Coated Steel*

**MTO**
Please refer to the price list or reach out to your local representative for our made-to-order options

**Shade material**
*Steel*
Powder Coated
Lacquered

**Base material**
*Steel / Aluminum*
Powder Coated Black

**Canopy material**
*Steel / Aluminum*
Powder Coated Black

**Bulb specifications**
*Recommended for US:*
2 × G9 LED, max. 5W/120V
or 2 × G9 Halogen, max. 48W/120V

*Recommended for EU/UK:*
2 × G9 LED, max. 5W/230V
or 2 × G9 Halogen, max. 48W/230V

Bulb height maximum: 5.9 cm / 2.3 in
Bulb diameter maximum: 2.2 cm / 0.9 in

Please note that the Alphabeta lamps ship without bulbs

**Cable Options**
*Standard Cable*
Hanging length: 1.6 m / 5.2 ft
Cable length: 2 m / 6.6 ft

*Extended Cable (EU/UK)*
Hanging length 5.2 m / 17 ft
Cable length 5.7 m / 18.7 ft

*Extended Cable (US)*
Hanging length: 6 m / 19.7 ft
Cable length: 6.5 m / 21.3 ft

All cables are site-adjustable.

**Country of origin**
Italy and China

**Tests & certifications**
CE Approved
UL Listed

**3D model**
3D files of all products are available on the product pages on hem.com

**Modularity**
This is a modular product that can be configured freely to fit your needs. Reach out to info@hem.com for assistance

**Alphabeta Shades Overview**

**Cone Small**
H: 9 cm / 3.5 in
D: 14 cm / 5.5 in

**Cone Tall**
H: 17 cm / 6.6 in
D: 14 cm / 5.5 in

**Cone Large**
H: 12 cm / 4.7 in
D: 34 cm / 13.3 in

**Round Small**
H: 8 cm / 3.1 in
D: 9 cm / 3.5 in

**Round Medium**
H: 8 cm / 3.1 in
D: 14 cm / 5.5 in

**Round Large**
H: 11 cm / 4.3 in
D: 19 cm / 7.4 in

**Round Tall**
H: 15 cm / 5.9 in
D: 16 cm / 6.2 in

**Round Cylinder**
H: 21 cm / 8.3 in
D: 8 cm / 3.1 in

**Cable**
Find available cable options in the column on the left

**Alphabeta Pendant Light**

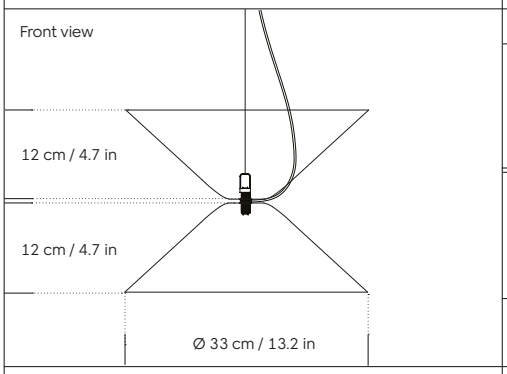


**Alphabeta Pendant Light**

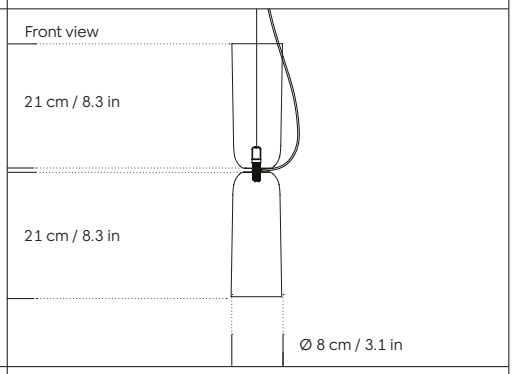


**Cable (canopy)**

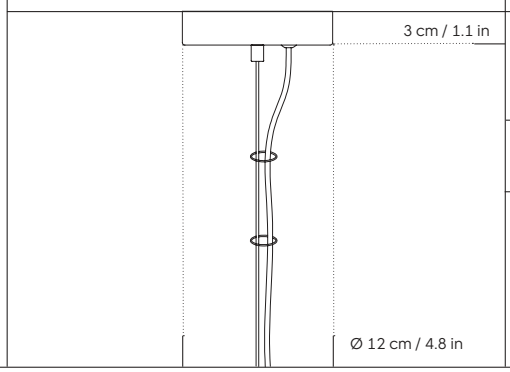


**Cable (lampholder)**

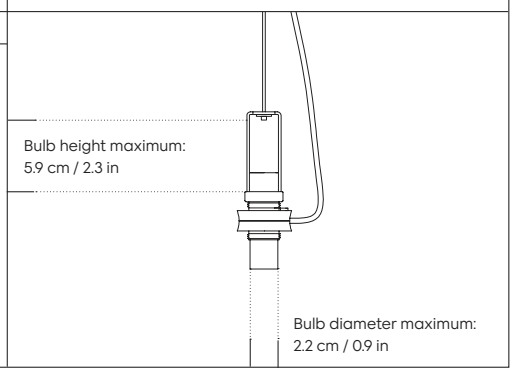

# Alphabeta Wall Light

*Design by Luca Nichetto*

Variety and flexibility are at the heart of the modular Alphabeta lighting system by Luca Nichetto. Eight different shade shapes in a wide range of powder-coated colors equate to a plethora of possibilities—1024 to be exact. Whatever your aesthetic, from strict and somber all-black to playful and flamboyant color combinations, sharp lines or voluptuous forms, Alphabeta can accommodate them all. Alphabeta are bidirectional—meaning they emit light from both the top and the bottom of the shade—so that you need not choose between spotlight and ambient light but can enjoy both. The Alphabeta Wall Light comes either with a cable and dimmer, or without cable for direct installation.

| Product name | Finish | SKU |
|---|---|---|
| **Alphabeta Wall Light Base with Cable (EU) Black** | Black | 30581 |
| **Alphabeta Wall Light Base with Cable (US) Black** | Black | 30582 |
| **Alphabeta Wall Light Base with Cable (UK) Black** | Black | 30583 |
| **Alphabeta Wall Light Base (EU) Black** | Black | 30584 |
| **Alphabeta Wall Light Base (US) Black** | Black | 30585 |
| **Alphabeta Shade Cone Large** | Jet Black | 13313 |
| **Alphabeta Shade Cone Large** | Signal White | 13314 |
| **Alphabeta Shade Cone Large** | Luminous Green | 20253 |
| **Alphabeta Shade Cone Large** | Silk Grey | 20252 |
| **Alphabeta Shade Cone Small** | Jet Black | 13309 |
| **Alphabeta Shade Cone Small** | Signal White | 13310 |
| **Alphabeta Shade Cone Small** | Soft Blue | 20368 |
| **Alphabeta Shade Cone Small** | Sulfur Yellow | 20369 |
| **Alphabeta Shade Cone Tall** | Jet Black | 13306 |
| **Alphabeta Shade Cone Tall** | Signal White | 13307 |
| **Alphabeta Shade Cone Tall** | Beige | 20254 |
| **Alphabeta Shade Cone Tall** | Ultramarine Blue | 20255 |
| **Alphabeta Shade Round Cylinder** | Jet Black | 13322 |
| **Alphabeta Shade Round Cylinder** | Light Pink | 20008 |
| **Alphabeta Shade Round Cylinder** | Signal White | 13323 |
| **Alphabeta Shade Round Cylinder** | Luminous Green | 20370 |
| **Alphabeta Shade Round Large** | Jet Black | 13300 |
| **Alphabeta Shade Round Large** | Signal White | 13301 |
| **Alphabeta Shade Round Large** | Ultramarine Blue | 20256 |
| **Alphabeta Shade Round Large** | Beige | 20257 |
| **Alphabeta Shade Round Medium** | Jet Black | 13319 |
| **Alphabeta Shade Round Medium** | Signal White | 13320 |
| **Alphabeta Shade Round Medium** | Black Green | 20371 |
| **Alphabeta Shade Round Medium** | Silk Grey | 20372 |
| **Alphabeta Shade Round Small** | Jet Black | 13303 |
| **Alphabeta Shade Round Small** | Signal White | 13304 |
| **Alphabeta Shade Round Small** | Sulfur Yellow | 20373 |
| **Alphabeta Shade Round Small** | Soft Blue | 20374 |
| **Alphabeta Shade Round Tall** | Jet Black | 13316 |
| **Alphabeta Shade Round Tall** | Light Pink | 13315 |
| **Alphabeta Shade Round Tall** | Signal White | 13317 |
| **Alphabeta Shade Round Tall** | Black Green | 20375 |

**Always in stock**
We keep all our products in stock and ready to ship from our warehouses in the US and EU

**Jet Black (RAL 9005)** *Powder Coated Steel*

**Signal White (RAL 9003)** *Powder Coated Steel*

**Luminous Green (RAL 6038)** *Powder Coated Steel*

**Silk Grey (RAL 7044)** *Powder Coated Steel*

**Beige (RAL 1001)** *Powder Coated Steel*

**Light Pink (RAL 3015)** *Powder Coated Steel*

**Ultramarine Blue (RAL 5002)** *Powder Coated Steel*

**Soft Blue (RAL 230 85 20)** *Powder Coated Steel*

**Black Green (RAL 6012)** *Powder Coated Steel*

**Sulfur Yellow (RAL 1016)** *Powder Coated Steel*

**MTO**
Please refer to the price list or reach out to your local representative for our made-to-order options

**Shade material**
*Steel*
Powder Coated
Lacquered

**Base material**
*Steel / Aluminum*
Powder Coated Black

**Bulb specifications**
*Recommended for US:*
2 × G9 LED, max. 5W/120V

*Recommended for EU/UK:*
2 × G9 LED, max. 5W/230V
or 2 × G9 Halogen, max. 48W/230V

Please note that the Alphabeta lamps ship without bulbs

**Cable**
*Length:*
2 m / 78.7 in

*Distance to dimmer from light:*
90 cm / 35.4 in

**Country of origin**
Italy and China

**Tests & certifications**
CE Approved
UL Listed

**3D model**
3D files of all products are available on the product pages on hem.com

**Modularity**
This is a modular product that can be configured freely to fit your needs. Reach out to info@hem.com for assistance

**Alphabeta Shades Overview**

**Cone Small**
H: 9 cm / 3.5 in
D: 14 cm / 5.5 in

**Cone Tall**
H: 17 cm / 6.6 in
D: 14 cm / 5.5 in

**Cone Large**
H: 12 cm / 4.7 in
D: 34 cm / 13.3 in

**Round Small**
H: 8 cm / 3.1 in
D: 9 cm / 3.5 in

**Round Medium**
H: 8 cm / 3.1 in
D: 14 cm / 5.5 in

**Round Large**
H: 11 cm / 4.3 in
D: 19 cm / 7.4 in

**Round Tall**
H: 15 cm / 5.9 in
D: 16 cm / 6.2 in

**Round Cylinder**
H: 21 cm / 8.3 in
D: 8 cm / 3.1 in

**Base**
The Base is also available with cable.

**Alphabeta Wall Light**

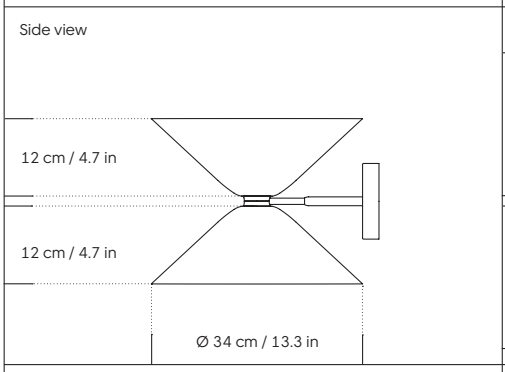


**Alphabeta Wall Light**

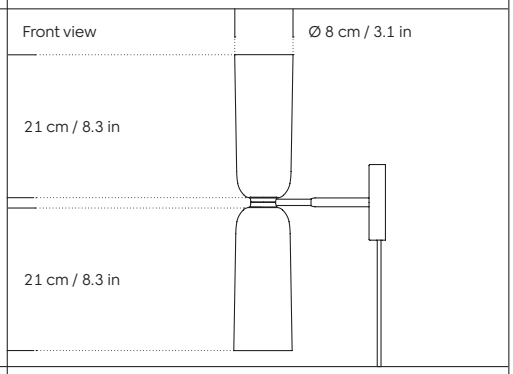


**Base**

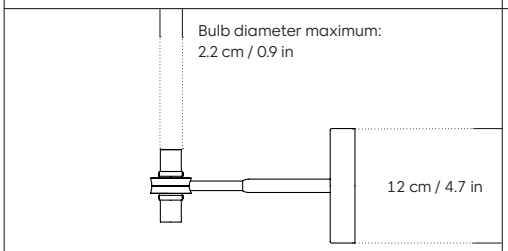


**Base with Cable**

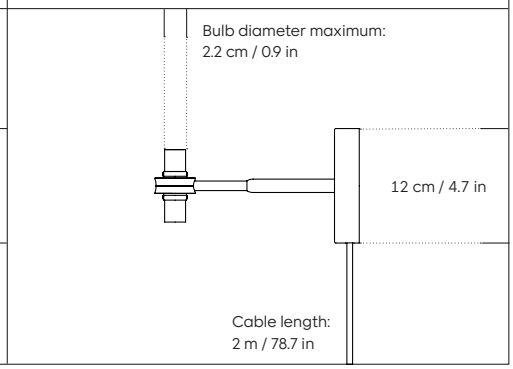

# Alphabeta — Price List

| Product name | Finish | SKU | Retail Price SEK | List Price SEK (ex VAT) |
|---|---|---|---|---|
| **Curated Collection** | | | | |
| **Alphabeta Floor Lamp** | Beige | 20340 | 9 419 | 7 659 |
| **Alphabeta Floor Lamp** | Beige / Green | 20336 | 9 419 | 7 659 |
| **Alphabeta Floor Lamp** | Beige / White | 20334 | 9 419 | 7 659 |
| **Alphabeta Floor Lamp** | Black | 20081 | 9 419 | 7 659 |
| **Alphabeta Floor Lamp** | Black / Blue | 20333 | 9 419 | 7 659 |
| **Alphabeta Floor Lamp** | Black / White | 20341 | 9 419 | 7 659 |
| **Alphabeta Floor Lamp** | Black Green / Soft Blue | 20445 | 9 419 | 7 659 |
| **Alphabeta Floor Lamp** | Blue | 20339 | 9 419 | 7 659 |
| **Alphabeta Floor Lamp** | Blue / Grey | 20337 | 9 419 | 7 659 |
| **Alphabeta Floor Lamp** | Luminous Green / White | 20447 | 9 419 | 7 659 |
| **Alphabeta Floor Lamp** | Soft Blue / Silk Grey | 20444 | 9 419 | 7 659 |
| **Alphabeta Floor Lamp** | Sulfur Yellow / Light Pink | 20442 | 9 419 | 7 659 |
| **Alphabeta Floor Lamp** | Sulfur Yellow / Silk Grey | 20446 | 9 419 | 7 659 |
| **Alphabeta Floor Lamp** | White | 20077 | 9 419 | 7 659 |
| **Alphabeta Floor Lamp** | White / Blue | 20338 | 9 419 | 7 659 |
| **Alphabeta Floor Lamp** | White / Grey | 20332 | 9 419 | 7 659 |
| **Alphabeta Floor Lamp** | White / Light Pink | 20079 | 9 419 | 7 659 |
| **Alphabeta Floor Lamp Base (EU)** | Black | 20034 | 6 659 | 5 417 |
| **Alphabeta Pendant Light Standard Cable (EU)** | Black | 13336 | 2 864 | 2 323 |
| **Alphabeta Pendant Trio** | Black | 13790 | 16 894 | 13 731 |
| **Alphabeta Pendant Uno** | Beige | 20330 | 5 624 | 4 577 |
| **Alphabeta Pendant Uno** | Beige / Green | 20326 | 5 624 | 4 577 |
| **Alphabeta Pendant Uno** | Beige / White | 20324 | 5 624 | 4 577 |
| **Alphabeta Pendant Uno** | Black / Black | 20056 | 5 624 | 4 577 |
| **Alphabeta Pendant Uno** | Black / Blue | 20323 | 5 624 | 4 577 |
| **Alphabeta Pendant Uno** | Black / Steel Blue | 20047 | 5 624 | 4 577 |
| **Alphabeta Pendant Uno** | Black / White | 20051 | 5 624 | 4 577 |
| **Alphabeta Pendant Uno** | Black / White | 20331 | 5 624 | 4 577 |
| **Alphabeta Pendant Uno** | Black Green / Soft Blue | 20439 | 5 624 | 4 577 |
| **Alphabeta Pendant Uno** | Blue | 20329 | 5 624 | 4 577 |
| **Alphabeta Pendant Uno** | Blue / Grey | 20327 | 5 624 | 4 577 |
| **Alphabeta Pendant Uno** | Luminous Green / Signal White | 20441 | 5 624 | 4 577 |
| **Alphabeta Pendant Uno** | Signal White / Jet Black | 20046 | 5 624 | 4 577 |
| **Alphabeta Pendant Uno** | Soft Blue / Silk Grey | 20438 | 5 624 | 4 577 |
| **Alphabeta Pendant Uno** | Sulfur Yellow / Light Pink | 20436 | 5 624 | 4 577 |
| **Alphabeta Pendant Uno** | Sulfur Yellow / Silk Grey | 20440 | 5 624 | 4 577 |
| **Alphabeta Pendant Uno** | White | 20065 | 5 624 | 4 577 |
| **Alphabeta Pendant Uno** | White / Blue | 20328 | 5 624 | 4 577 |
| **Alphabeta Pendant Uno** | White / Grey | 20322 | 5 624 | 4 577 |
| **Alphabeta Shade Cone Large (CL)** | Jet Black | 13313 | 1 484 | 1 208 |
| **Alphabeta Shade Cone Large (CL)** | Luminous Green | 20253 | 1 484 | 1 208 |
| **Alphabeta Shade Cone Large (CL)** | Signal White | 13314 | 1 484 | 1 208 |
| **Alphabeta Shade Cone Large (CL)** | Silk Grey | 20252 | 1 484 | 1 208 |
| **Alphabeta Shade Cone Small (CS)** | Jet Black | 13309 | 1 484 | 1 208 |
| **Alphabeta Shade Cone Small (CS)** | Pastel Turquoise | 13308 | 1 484 | 1 208 |
| **Alphabeta Shade Cone Small (CS)** | Signal White | 13310 | 1 484 | 1 208 |
| **Alphabeta Shade Cone Small (CS)** | Soft Blue | 20368 | 1 484 | 1 208 |
| **Alphabeta Shade Cone Small (CS)** | Sulfur Yellow | 20369 | 1 484 | 1 208 |
| **Alphabeta Shade Cone Tall (CT)** | Beige | 20254 | 1 484 | 1 208 |
| **Alphabeta Shade Cone Tall (CT)** | Jet Black | 13306 | 1 484 | 1 208 |
| **Alphabeta Shade Cone Tall (CT)** | Signal White | 13307 | 1 484 | 1 208 |
| **Alphabeta Shade Cone Tall (CT)** | Steel Blue | 20002 | 1 484 | 1 208 |
| **Alphabeta Shade Cone Tall (CT)** | Ultramarine Blue | 20255 | 1 484 | 1 208 |
| **Alphabeta Shade Round Cylinder (RC)** | Jet Black | 13322 | 1 484 | 1 208 |
| **Alphabeta Shade Round Cylinder (RC)** | Light Pink | 20008 | 1 484 | 1 208 |
| **Alphabeta Shade Round Cylinder (RC)** | Luminous Green | 20370 | 1 484 | 1 208 |
| **Alphabeta Shade Round Cylinder (RC)** | Reseda Green | 13321 | 1 484 | 1 208 |
| **Alphabeta Shade Round Cylinder (RC)** | Signal White | 13323 | 1 484 | 1 208 |
| **Alphabeta Shade Round Large (RL)** | Beige | 20257 | 1 484 | 1 208 |
| **Alphabeta Shade Round Large (RL)** | Jet Black | 13300 | 1 484 | 1 208 |
| **Alphabeta Shade Round Large (RL)** | Signal White | 13301 | 1 484 | 1 208 |
| **Alphabeta Shade Round Large (RL)** | Ultramarine Blue | 20256 | 1 484 | 1 208 |

# Alphabeta — Price List

| Product name | Finish | SKU | Retail Price SEK | List Price SEK (ex VAT) |
|---|---|---|---|---|
| **Curated Collection** | | | | |
| **Alphabeta Shade Round Medium (RM)** | Beige Grey | 20007 | 1 484 | 1 208 |
| **Alphabeta Shade Round Medium (RM)** | Black Green | 20371 | 1 484 | 1 208 |
| **Alphabeta Shade Round Medium (RM)** | Black Red | 13318 | 1 484 | 1 208 |
| **Alphabeta Shade Round Medium (RM)** | Jet Black | 13319 | 1 484 | 1 208 |
| **Alphabeta Shade Round Medium (RM)** | Signal White | 13320 | 1 484 | 1 208 |
| **Alphabeta Shade Round Medium (RM)** | Silk Grey | 20372 | 1 484 | 1 208 |
| **Alphabeta Shade Round Small (RS)** | Coral Red | 13302 | 1 484 | 1 208 |
| **Alphabeta Shade Round Small (RS)** | Jet Black | 13303 | 1 484 | 1 208 |
| **Alphabeta Shade Round Small (RS)** | Signal White | 13304 | 1 484 | 1 208 |
| **Alphabeta Shade Round Small (RS)** | Soft Blue | 20374 | 1 484 | 1 208 |
| **Alphabeta Shade Round Small (RS)** | Sulfur Yellow | 20373 | 1 484 | 1 208 |
| **Alphabeta Shade Round Tall (RT)** | Black Green | 20375 | 1 484 | 1 208 |
| **Alphabeta Shade Round Tall (RT)** | Jet Black | 13316 | 1 484 | 1 208 |
| **Alphabeta Shade Round Tall (RT)** | Light Pink | 13315 | 1 484 | 1 208 |
| **Alphabeta Shade Round Tall (RT)** | Signal White | 13317 | 1 484 | 1 208 |
| **Alphabeta Wall Light** | Beige | 20384 | 5 279 | 4 290 |
| **Alphabeta Wall Light** | Beige / Green | 20380 | 5 279 | 4 290 |
| **Alphabeta Wall Light** | Beige / Signal White | 20378 | 5 279 | 4 290 |
| **Alphabeta Wall Light** | Black / White | 20385 | 5 279 | 4 290 |
| **Alphabeta Wall Light** | Black Green / Soft Blue | 20421 | 5 279 | 4 290 |
| **Alphabeta Wall Light** | Blue | 20383 | 5 279 | 4 290 |
| **Alphabeta Wall Light** | Blue / Silk Grey | 20381 | 5 279 | 4 290 |
| **Alphabeta Wall Light** | Jet Black / Blue | 20377 | 5 279 | 4 290 |
| **Alphabeta Wall Light** | Luminous Green / White | 20423 | 5 279 | 4 290 |
| **Alphabeta Wall Light** | Signal White / Silk Grey | 20376 | 5 279 | 4 290 |
| **Alphabeta Wall Light** | Soft Blue / Silk Grey | 20420 | 5 279 | 4 290 |
| **Alphabeta Wall Light** | Sulfur Yellow / Light Pink | 20418 | 5 279 | 4 290 |
| **Alphabeta Wall Light** | Sulfur Yellow / Silk Grey | 20422 | 5 279 | 4 290 |
| **Alphabeta Wall Light** | White / Blue | 20382 | 5 279 | 4 290 |
| **Alphabeta Wall Light + Cable** | Beige | 20394 | 5 279 | 4 290 |
| **Alphabeta Wall Light + Cable** | Beige / Green | 20390 | 5 279 | 4 290 |
| **Alphabeta Wall Light + Cable** | Beige / Signal White | 20388 | 5 279 | 4 290 |
| **Alphabeta Wall Light + Cable** | Black Green / Soft Blue | 20427 | 5 279 | 4 290 |
| **Alphabeta Wall Light + Cable** | Blue | 20393 | 5 279 | 4 290 |
| **Alphabeta Wall Light + Cable** | Blue / Silk Grey | 20391 | 5 279 | 4 290 |
| **Alphabeta Wall Light + Cable** | Jet Black / Blue | 20387 | 5 279 | 4 290 |
| **Alphabeta Wall Light + Cable** | Jet Black / Signal White | 20395 | 5 279 | 4 290 |
| **Alphabeta Wall Light + Cable** | Luminous Green / White | 20429 | 5 279 | 4 290 |
| **Alphabeta Wall Light + Cable** | Signal White / Blue | 20392 | 5 279 | 4 290 |
| **Alphabeta Wall Light + Cable** | Signal White / Silk Grey | 20386 | 5 279 | 4 290 |
| **Alphabeta Wall Light + Cable** | Soft Blue / Silk Grey | 20426 | 5 279 | 4 290 |
| **Alphabeta Wall Light + Cable** | Sulfur Yellow / Light Pink | 20424 | 5 279 | 4 290 |
| **Alphabeta Wall Light + Cable** | Sulfur Yellow / Silk Grey | 20428 | 5 279 | 4 290 |
| **Alphabeta Wall Light Base (EU)** | Black | 30584 | 2 519 | 2 047 |
| **Alphabeta Wall Light Base + Cable (EU)** | Black | 30581 | 2 519 | 2 047 |

# Knuckle Table Lamp

*Design by David Taylor*

The Knuckle Lights by David Taylor are an exercise in visual balance, a kind of joyful play between the organic and the geometric. Knuckle is inspired by Taylor's signature bent extruded aluminum art pieces, which are created by forcing this most stringent of materials into new shapes and forms. This method of working, translated into Knuckle, creates a sense of softness and fluidity uncommon in an industrial product. Knuckle comes in the form of a modest table light with one bulb, and as a chandelier version, resplendent with eight bulbs.

| Product name | Finish | SKU |
|---|---|---|
| **Knuckle Table Lamp (EU)** | Brushed Aluminum | 20465 |
| **Knuckle Table Lamp (UK)** | Brushed Aluminum | 30656 |
| **Knuckle Table Lamp (US)** | Brushed Aluminum | 20466 |

**Base material**
*Aluminum*
Brushed Aluminum

**Bulb specifications**
*Recommended for US:*
1 × Tala Sphere III E26, max. 8W/120V

*Recommended for EU/UK:*
1 × Tala Sphere III E27, max. 8W/240V

Bulbs are included.

**Cable**
Cable length: 185 cm / 72.8 in

**Country of origin**
China

**Tests & certifications**
*EU / UK certifications*
EN 60598-2-4:2018, EN IEC 60598-1:2021, EN IEC 60598-1:2021, EN 61547:2009, EN 61000-3-3:2013+A2:2021, EN IEC 61000-3-2:2019+A1:2021, RoHS directive 2011/65/EU

*US certifications*
UL153 , CSA C22 No.250.4

4002604

**3D model**
3D files of all products are available on the product pages on hem.com

**Always in stock**
We keep all our products in stock and ready to ship from our warehouses in the US and EU

**Natural Silver**
*Brushed Aluminum*

**Knuckle Table Lamp**

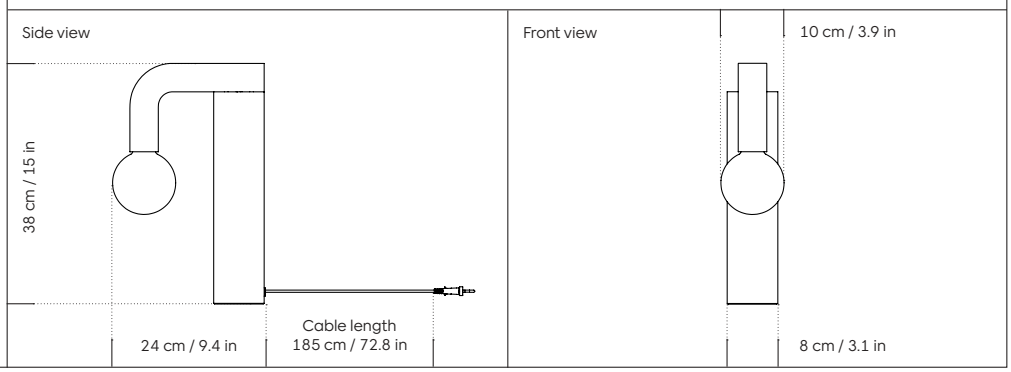

# Knuckle — Price List

| Product name | Finish | SKU | Retail Price SEK | List Price SEK (ex VAT) |
|---|---|---|---|---|
| **Curated Collection** | | | | |
| **Knuckle Table Lamp (EU Plug)** | Brushed Aluminum | 20465 | 4 704 | 3 830 |

# Toto Table Lamp

*Design by Fabien Cappello*

Toto is an irrepressible burst of color and light. Its silhouette is that of an archetypal lamp, all-angled shade and a chunky base. But that is where the familiarity ends. Toto is entirely covered from textile as a playful extension of the classic lampshade itself. Material uniformity, coupled with vivid color and graphic pattern, lends the lamp a cartoonish presence. So does exaggerated scale; the Toto Large lamp is blown up, jumbo, never-to-be-ignored, visually giant yet physically light, while Toto Small's tidy and diminutive size is more than a bit charming. With Toto, Fabien Cappello has designed a joyful, covetable depiction of a lamp. Customers can choose their own combination for shade and base in both Toto Large and Medium variants. Toto Small is available in block colors only.

| Product name | Finish | SKU (US) | SKU (EU) | SKU (UK) |
|---|---|---|---|---|
| **Toto Table Lamp Small** | Magenta | 31246 | 31207 | 31257 |
| | Pine | 31247 | 31208 | 31258 |
| | Wax Yellow | 31248 | 31209 | 31259 |
| | Beige | 31245 | 31206 | 31256 |
| **Toto Table Lamp Medium** | Wax Yellow / Wax Yellow | 31244 | 31205 | 31281 |
| | Beige / Wax Yellow | 31232 | 31193 | 31269 |
| | Pine / Wax Yellow | 31240 | 31201 | 31277 |
| | Magenta / Wax Yellow | 31236 | 31197 | 31273 |
| | Wax Yellow / Magenta | 31242 | 31203 | 31279 |
| | Beige / Magenta | 31230 | 31191 | 31267 |
| | Pine / Magenta | 31238 | 31199 | 31275 |
| | Magenta / Magenta | 31234 | 31195 | 31271 |
| | Wax Yellow / Beige | 31241 | 31202 | 31278 |
| | Beige / Beige | 31229 | 31190 | 31266 |
| | Pine / Beige | 31237 | 31198 | 31274 |
| | Magenta / Beige | 31233 | 31194 | 31270 |
| | Wax Yellow / Pine | 31243 | 31204 | 31280 |
| | Beige / Pine | 31231 | 31192 | 31268 |
| | Pine / Pine | 31239 | 31200 | 31276 |
| | Magenta / Pine | 31235 | 31196 | 31272 |
| **Toto Table Lamp Large** | Wax Yellow / Black & White H Stripe | 31226 | 31187 | 31263 |
| | Pine / Black & White H Stripe | 31223 | 31184 | 31260 |
| | Pine / Wax Yellow | 31225 | 31186 | 31262 |
| | Wax Yellow / Wax Yellow | 31228 | 31189 | 31265 |
| | Wax Yellow / Pine | 31227 | 31188 | 31264 |
| | Pine / Pine | 31224 | 31185 | 31261 |

**Material**
*Polyester Blend Textile*
92.7% polyester, 7.3% cotton

**Inside Material**
Painted Steel Structure, PMMA Diffuser, PVC Shade Backing

**Bulb specifications**
*Recommended for US:*
*Toto Large*
1 × E26 dimmable LED, max. 8W/120V 60Hz

*Toto Medium*
1 × E26 dimmable LED, max. 8W/120V 60Hz

*Toto Small*
1 × E12 dimmable LED, max. 5W/120V 50Hz

*Recommended for EU/UK:*
*Toto Large*
1 × E27 dimmable LED, max. 8W/240V 60Hz

*Toto Medium*
1 × E27 dimmable LED, max. 8W/240V 60Hz

*Toto Small*
1 × E14 dimmable LED, max. 5W/240V 50Hz

Toto Lights are fitted with an In-line radial dimmer switch on the cords. Please note that Toto Lights ships without bulbs.

**Cable Length**
180 cm / 70.9 in

**Always in stock**
We keep all our products in stock and ready to ship from our warehouses in the US and EU

**Magenta**
*Polyester Blend Textile*

**Pine**
*Polyester Blend Textile*



**Wax Yellow**
*Polyester Blend Textile*



**Beige**
*Polyester Blend Textile*

**Black & White H Stripe**
*Polyester Blend Textile*

**3D model**
3D files of all products are available on the product pages on hem.com

**Tests & certifications**

*EU / UK certifications*

EN 60598-2-4:2018, EN IEC 60598-1:2021, EN IEC 55015:2019+A11:2020, EN 61547:2009, EN IEC 61000-3-2:2019+A1:2021, EN 61000-3-3:2013+A2:2021, RoHS directive 2011/65/EU

*US certifications*

UL 153, CSA C22.2 No.250.4

4002604

**Toto Table Lamp Large**

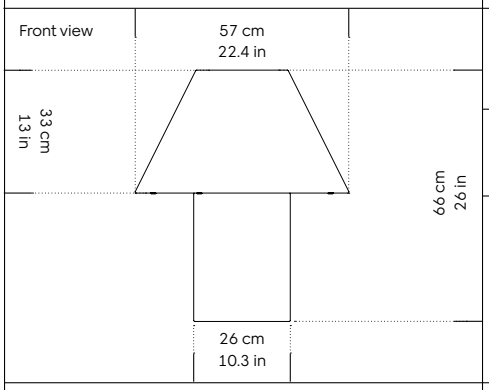


**Toto Table Lamp Medium**

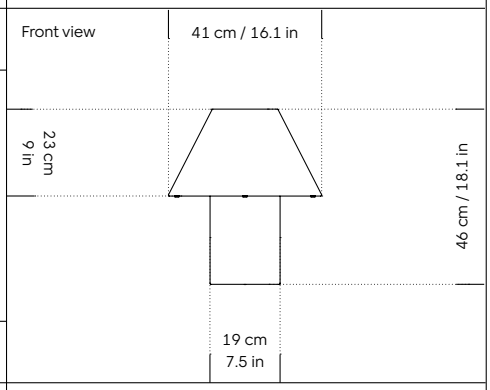


**Toto Table Lamp Small**

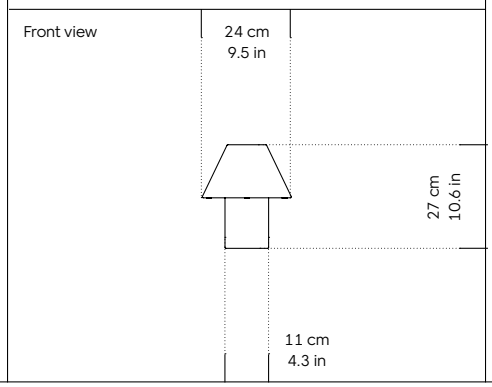

# Toto — Price List

| Product name | Finish | SKU | Retail Price SEK | List Price SEK (ex VAT) |
|---|---|---|---|---|
| **Curated Collection** | | | | |
| **Toto Table Lamp Large** | Pine / Black & White H Stripe (EU) | 31184 | 8 039 | 6 532 |
| **Toto Table Lamp Large** | Pine / Pine (EU) | 31185 | 8 039 | 6 532 |
| **Toto Table Lamp Large** | Pine / Wax Yellow (EU) | 31186 | 8 039 | 6 532 |
| **Toto Table Lamp Large** | Wax Yellow / Black & White H Stripe (EU) | 31187 | 8 039 | 6 532 |
| **Toto Table Lamp Large** | Wax Yellow / Pine (EU) | 31188 | 8 039 | 6 532 |
| **Toto Table Lamp Large** | Wax Yellow / Wax Yellow (EU) | 31189 | 8 039 | 6 532 |
| **Toto Table Lamp Medium** | Beige / Beige (EU) | 31190 | 4 474 | 3 634 |
| **Toto Table Lamp Medium** | Beige / Magenta (EU) | 31191 | 4 474 | 3 634 |
| **Toto Table Lamp Medium** | Beige / Pine (EU) | 31192 | 4 474 | 3 634 |
| **Toto Table Lamp Medium** | Beige / Wax Yellow (EU) | 31193 | 4 474 | 3 634 |
| **Toto Table Lamp Medium** | Magenta / Beige (EU) | 31194 | 4 474 | 3 634 |
| **Toto Table Lamp Medium** | Magenta / Magenta (EU) | 31195 | 4 474 | 3 634 |
| **Toto Table Lamp Medium** | Magenta / Pine (EU) | 31196 | 4 474 | 3 634 |
| **Toto Table Lamp Medium** | Magenta / Wax Yellow (EU) | 31197 | 4 474 | 3 634 |
| **Toto Table Lamp Medium** | Pine / Beige (EU) | 31198 | 4 474 | 3 634 |
| **Toto Table Lamp Medium** | Pine / Magenta (EU) | 31199 | 4 474 | 3 634 |
| **Toto Table Lamp Medium** | Pine / Pine (EU) | 31200 | 4 474 | 3 634 |
| **Toto Table Lamp Medium** | Pine / Wax Yellow (EU) | 31201 | 4 474 | 3 634 |
| **Toto Table Lamp Medium** | Wax Yellow / Beige (EU) | 31202 | 4 474 | 3 634 |
| **Toto Table Lamp Medium** | Wax Yellow / Magenta (EU) | 31203 | 4 474 | 3 634 |
| **Toto Table Lamp Medium** | Wax Yellow / Pine (EU) | 31204 | 4 474 | 3 634 |
| **Toto Table Lamp Medium** | Wax Yellow / Wax Yellow (EU) | 31205 | 4 474 | 3 634 |
| **Toto Table Lamp Small** | Magenta (EU) | 31207 | 2 404 | 1 955 |
| **Toto Table Lamp Small** | Pine (EU) | 31208 | 2 404 | 1 955 |

# Shelving

# Storage

**Where would we be without some order in our lives? Our elegant and considered storage systems are designed to work with your belongings, whether it is display or concealment you are looking for.**

# Hide Pedestal

*Design by Karoline Fesser*

The Hide Table by Karoline Fesser is a Hem hero product. Why? Because this modest piece of furniture is far more necessary and boundless than it might at first seem. The Hide Table can be discreet: tucked under a larger desk or table for additional storage, or sitting quietly in the corner of a room, its back turned to conceal its contents. Or it can be bold: a pedestal and side table for your favorite objects, a punctuation of brilliant color, or an open display for all manner of paraphernalia. The Hide Table is beautifully finished in powder-coated steel and has wheels for easy maneuverability. We have yet to hear from a regretful owner.

| Product name | Finish | SKU | Finish | SKU |
|---|---|---|---|---|
| **Hide Pedestal** | Signal Black | 30031 | Jet Black Textured | 30745 |
| | Light Ivory | 30032 | Light Ivory Textured | 30746 |
| | Light Pink | 30325 | Light Pink Textured | 30752 |
| | Pure Green | 30554 | Pure Green Textured | 30754 |
| | Red Brown | 30034 | Red Brown Textured | 30748 |
| | Ultramarine | 30326 | Ultramarine Textured | 30753 |

**Material**
*Steel*
Powder Coated

**Finish**
No Texture / Fine Texture

**Country of origin**
No Texture: Poland
Fine Texture: Lithuania

**3D model**
3D files of all products are available on the product pages on hem.com

**Finishes**

**Signal Black (RAL 9004)**
*Powder Coated Steel*

**Light Ivory (RAL 1015)**
*Powder Coated Steel*

**Red Brown (RAL 8012)**
*Powder Coated Steel*

**Light Pink (RAL 3015)**
*Powder Coated Steel*

**Ultramarine Blue (RAL 5002)**
*Powder Coated Steel*

**Pure Green (RAL 6037)**
*Powder Coated Steel*

**Samples**
We supply samples of our material finishes. You can order them directly from hem.com/samples

**Textures**

**None**

**Fine**

**MTO**
Please refer to the price list or reach out to your local representative for our made-to-order options

**Hide Pedestal**

Top view

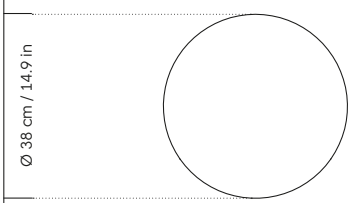


Side view

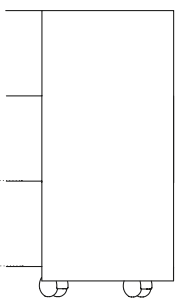


Back view

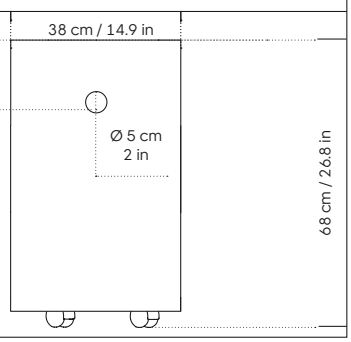

# Hide Side Table

*Design by Karoline Fesser*

The Hide Table by Karoline Fesser is a Hem hero product. Why? Because this modest piece of furniture is far more necessary and boundless than it might at first seem. The Hide Table can be discreet: tucked under a larger desk or table for additional storage, or sitting quietly in the corner of a room, its back turned to conceal its contents. Or it can be bold: a pedestal and side table for your favorite objects, a punctuation of brilliant color, or an open display for all manner of paraphernalia. The Hide Table is beautifully finished in powder-coated steel and has wheels for easy maneuverability. We have yet to hear from a regretful owner.

| Product name | Finish | SKU | Finish | SKU |
|---|---|---|---|---|
| **Hide Side Table** | Signal Black | 14153 | Jet Black Textured | 30742 |
| | Light Ivory | 14152 | Light Ivory Textured | 30741 |
| | Light Pink | 30148 | Light Pink Textured | 30750 |
| | Pure Green | 30556 | Pure Green Textured | 30756 |
| | Red Brown | 14155 | Red Brown Textured | 30744 |
| | Ultramarine Blue | 30149 | Ultramarine Blue Textured | 30751 |

**Material**
*Steel*
Powder Coated

**Finish**
No Texture / Fine Texture

**Country of origin**
No Texture: Poland
Fine Texture: Lithuania

**3D model**
3D files of all products are available on the product pages on hem.com

**Finishes**

**Signal Black (RAL 9004)**
*Powder Coated Steel*

**Light Ivory (RAL 1015)**
*Powder Coated Steel*

**Red Brown (RAL 8012)**
*Powder Coated Steel*

**Light Pink (RAL 3015)**
*Powder Coated Steel*

**Ultramarine Blue (RAL 5002)**
*Powder Coated Steel*

**Pure Green (RAL 6037)**
*Powder Coated Steel*

**Textures**

**None**

**Fine**

**Samples**
We supply samples of our material finishes. You can order them directly from hem.com/samples

**MTO**
Please refer to the price list or reach out to your local representative for our made-to-order options

**Hide Side Table**

Top view

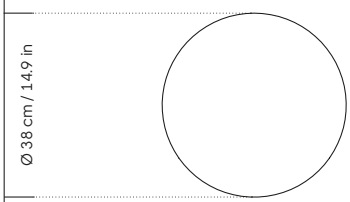


Side view

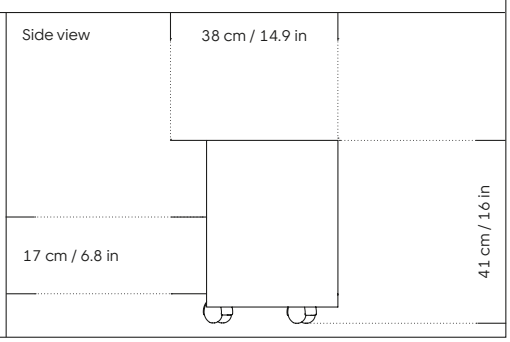

# Hide Pedestal & Side Table — Price List

| Product name | Finish | SKU | Retail Price SEK | List Price SEK (ex VAT) |
|---|---|---|---|---|
| **Curated Collection** | | | | |
| **Hide Pedestal** | Jet Black Textured | 30745 | 6 659 | 5 417 |
| **Hide Pedestal** | Light Ivory | 30032 | 6 659 | 5 417 |
| **Hide Pedestal** | Light Ivory Textured | 30746 | 6 659 | 5 417 |
| **Hide Pedestal** | Light Pink | 30325 | 6 659 | 5 417 |
| **Hide Pedestal** | Light Pink Textured | 30752 | 6 659 | 5 417 |
| **Hide Pedestal** | Pure Green Textured | 30754 | 6 659 | 5 417 |
| **Hide Pedestal** | Pure Orange | 30033 | 6 659 | 5 417 |
| **Hide Pedestal** | Pure Orange Textured | 30747 | 6 659 | 5 417 |
| **Hide Pedestal** | Red Brown Textured | 30748 | 6 659 | 5 417 |
| **Hide Pedestal** | Signal Black | 30031 | 6 659 | 5 417 |
| **Hide Pedestal** | Sulfur Yellow | 30555 | 6 659 | 5 417 |
| **Hide Pedestal** | Sulfur Yellow Textured | 30755 | 6 659 | 5 417 |
| **Hide Pedestal** | Ultramarine Blue | 30326 | 6 659 | 5 417 |
| **Hide Pedestal** | Ultramarine Blue Textured | 30753 | 6 659 | 5 417 |
| **Hide Side Table** | Jet Black Textured | 30742 | 4 934 | 4 014 |
| **Hide Side Table** | Light Ivory Textured | 30741 | 4 934 | 4 014 |
| **Hide Side Table** | Light Pink | 30148 | 4 934 | 4 014 |
| **Hide Side Table** | Light Pink Textured | 30750 | 4 934 | 4 014 |
| **Hide Side Table** | Pure Green | 30556 | 4 934 | 4 014 |
| **Hide Side Table** | Pure Green Textured | 30756 | 4 934 | 4 014 |
| **Hide Side Table** | Pure Orange | 14154 | 4 934 | 4 014 |
| **Hide Side Table** | Pure Orange Textured | 30743 | 4 934 | 4 014 |
| **Hide Side Table** | Red Brown Textured | 30744 | 4 934 | 4 014 |
| **Hide Side Table** | Signal Black | 14153 | 4 934 | 4 014 |
| **Hide Side Table** | Sulfur Yellow | 30557 | 4 934 | 4 014 |
| **Hide Side Table** | Sulfur Yellow Textured | 30757 | 4 934 | 4 014 |
| **Hide Side Table** | Ultramarine Blue | 30149 | 4 934 | 4 014 |
| **Hide Side Table** | Ultramarine Blue Textured | 30751 | 4 934 | 4 014 |

# Zig Zag Shelf

*Design by Studio deFORM*

There is a pleasing visual rhythm to the Zig Zag Shelf: its grid-like frame effortlessly creates an elegant semblance of order, making whatever you choose to place on it feel instantly arranged and considered. Designers Studio deForm invented a system of construction that enables you, the end user, to assemble the Zig Zag Shelf without tools. An innovative hidden folding hinge allows the flat-packed shelves to simply stretch into shape like an accordion—ready for use in record time.

| Product name | Finish | SKU |
|---|---|---|
| **Zig Zag Shelf High** | Oak | 14143 |
| | Walnut | 20088 |
| | Black | 30983 |
| **Zig Zag Shelf Low** | Oak | 14142 |
| | Walnut | 20087 |
| | Black | 30984 |

**Shelf material**
*Oak Veneer*
Quercus Robur
Clear Lacquered

*Walnut Veneer*
Juglans Nigra
Clear Lacquered

*Ash Veneer*
Fraxinus Excelsior
Black Lacquered

**Base material**
*Solid Oak*
Quercus Robur
Clear Lacquered

*Solid Walnut*
Juglans Nigra
Clear Lacquered

*Solid Ash*
Fraxinus Excelsior
Black Lacquered

Wood is a natural material. The color might vary from piece to piece

**Country of origin**
Poland

**Tests & certifications**
EN 16121:2013 – Test severity 2. Non-domestic storage furniture – Requirements for safety, strength, durability and stability, FSC Mix

**3D model**
3D files of all products are available on the product pages on hem.com

**Always in stock**
We keep all our products in stock and ready to ship from our warehouses in the US and EU

**Oak**

**Walnut**

**Samples**
We supply samples of our material finishes. You can order them directly from hem.com/samples

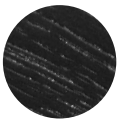

**Black**

**Zig Zag Shelf High**

Front view

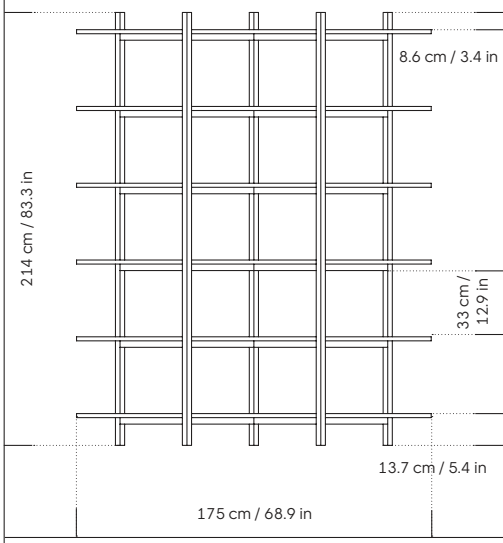


**MTO**
Please refer to the price list or reach out to your local representative for our made-to-order options

**Zig Zag Shelf Low**

Front view

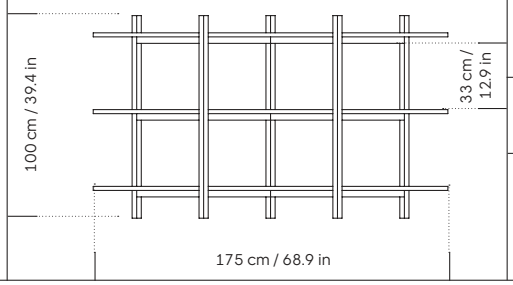


**Zig Zag Shelf High & Zig Zag Shelf Low**

Top view

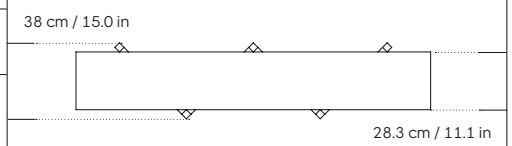

# Zig Zag Shelf Media

*Design by Studio deFORM*

There is a pleasing visual rhythm to the Zig Zag Shelf: its grid-like frame effortlessly creates an elegant semblance of order, making whatever you choose to place on it feel instantly arranged and considered. Designers Studio deForm invented a system of construction that enables you, the end user, to assemble the Zig Zag Shelf without tools. An innovative hidden folding hinge allows the flat-packed shelves to simply stretch into shape like an accordion—ready for use in record time.

| Product name | Finish | SKU |
|---|---|---|
| **Zig Zag Shelf Media** | Oak<br>Walnut<br>Black | 20090<br>20089<br>30985 |

**Shelf material**
*Oak Veneer*
Quercus Robur
Clear Lacquered

*Walnut Veneer*
Juglans Nigra
Clear Lacquered

*Ash Veneer*
Fraxinus Excelsior
Black Lacquered

**Base material**
*Solid Oak*
Quercus Robur
Clear Lacquered

*Solid Walnut*
Juglans Nigra
Clear Lacquered

*Solid Ash*
Fraxinus Excelsior
Black Lacquered

Wood is a natural material. The color might vary from piece to piece

**Country of origin**
Poland

**Tests & certifications**
EN 16121:2013 – Test severity 2. Non-domestic storage furniture – Requirements for safety, strength, durability and stability, FSC Mix

**3D model**
3D files of all products are available on the product pages on hem.com

**Always in stock**
We keep all our products in stock and ready to ship from our warehouses in the US and EU

**Oak**

**Walnut**

**Samples**
We supply samples of our material finishes. You can order them directly from hem.com/samples

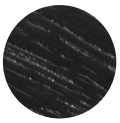

**Black**

**MTO**
Please refer to the price list or reach out to your local representative for our made-to-order options

**Zig Zag Shelf Media**

Front view

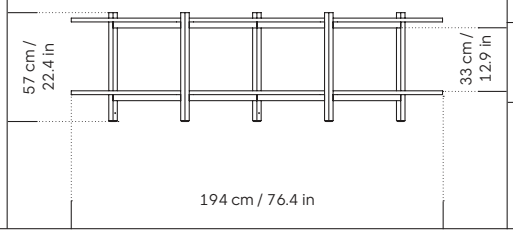


Top view

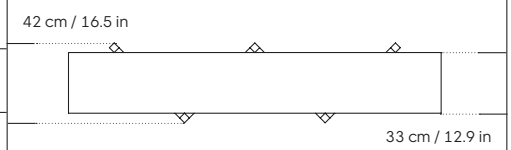

# Zig Zag Shelf — Price List

| Product name | Finish | SKU | Retail Price SEK | List Price SEK (ex VAT) |
|---|---|---|---|---|
| **Curated Collection** | | | | |
| **Zig Zag Shelf High** | Black | 30983 | 21 149 | 17 193 |
| **Zig Zag Shelf High** | Oak | 14143 | 22 299 | 18 124 |
| **Zig Zag Shelf High** | Walnut | 20088 | 31 154 | 25 323 |
| **Zig Zag Shelf Low** | Black | 30984 | 11 719 | 9 522 |
| **Zig Zag Shelf Low** | Oak | 14142 | 12 294 | 9 994 |
| **Zig Zag Shelf Low** | Walnut | 20087 | 18 849 | 15 330 |
| **Zig Zag Shelf Media** | Black | 30985 | 9 419 | 7 659 |
| **Zig Zag Shelf Media** | Oak | 20090 | 9 994 | 8 131 |
| **Zig Zag Shelf Media** | Walnut | 20089 | 14 709 | 11 960 |

# Rugs

**What goes underfoot should be of the very best quality. All our rugs are handmade and designed for longevity, using highquality natural fibers.**

# Monster Rug

*Design by Siri Carlén*

The Monster patterns by artist and illustrator Siri Carlén are playful exaggerations of markings found in nature. And fittingly, these boldly striped and ringed patterns adorn our largest rugs yet. The Monster collection of floor coverings are made to the highest standards; they are painstakingly hand-knotted by skilled makers in soft new wool, meaning that your Monster will be around to offer deep comfort and vibrant colour for many years to come. Produced in India by a weaving collective to global ethical standards such as GoodWeave, SGS, and Woolmark.

| Product name | Finish | SKU |
|---|---|---|
| **Monster Rug Medium** | Beige / Off-white | 30804 |
| | Ultramarine Blue / Off-white | 30805 |
| **Monster Rug Extra Large** | Beige / Off-white | 30489 |
| | Ultramarine Blue / Off-white | 30490 |
| | Turquoise / Peach | 30491 |
| | Dark Teal / Off-white | 30492 |

**Material**
*100% New Zealand Wool*

**Country of origin**
India

**Size tolerance**
All our rugs are hand-crafted and may vary up to +/- 5% along the total length or width

**Construction method**
Hand knotted

**Certifications**
Woolmark, Goodweave

**Always in stock**
We keep all our products in stock and ready to ship from our warehouses in the US and EU

**Beige / Off-white**

**Ultramarine Blue / Off-white**

**Turquoise / Peach**

**Dark Teal / Off-white**

**Monster Rug Medium**

Top view

240 cm / 94.5 in

170 cm / 66.9 in

Weight: 24 kg / 52.9 lb

Pile height: 5 cm / 2 in

**Monster Rug Extra Large**

Top view

350 cm / 137.8 in

250 cm / 98.4 in

Weight: 49 kg / 108 lb

Pile height: 5 cm / 2 in

# Rope Rug

*Design by Pauline Deltour*

Deeply textural, extremely functional, pleasantly tactile—the Rope Rug series is an innovative take on a familiar typology. Designer Pauline Deltour was inspired to reimagine the endlessly practical traditional Japanese tatami mat, but with rope to create a chunkier and more durable textile. Hem first produces meter upon meter of our own colorful cotton rope, which is then skillfully hand-woven into rugs of a variety of colorways and sizes. The rhythmic looping is an alluring texture when viewed from afar and a compelling design detail when experienced up close.

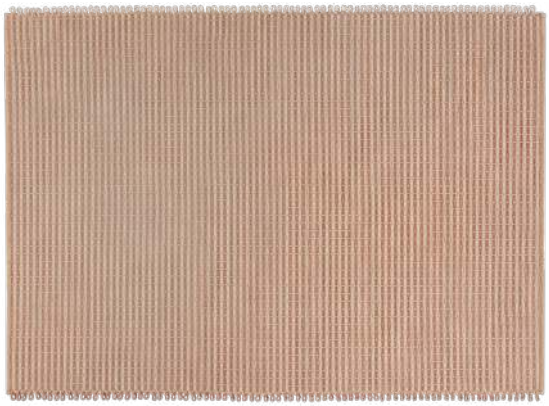

| Product name | Finish | SKU |
|---|---|---|
| **Rope Rug Large** | Night Blue | 30105 |
| | Pine | 30485 |
| | Rose Quartz | 30487 |
| | Salt & Pepper | 30111 |
| | Seaweed | 30102 |
| | Terracotta | 30108 |
| **Rope Rug Medium** | Night Blue | 30106 |
| | Pine | 30486 |
| | Rose Quartz | 30488 |
| | Salt & Pepper | 30112 |
| | Seaweed | 30103 |
| | Terracotta | 30109 |

**Material**
*95% Cotton, 5% Polyester*

**Country of origin**
India

**Size tolerance**
All our rugs are hand-crafted and may vary up to +/- 5% along the total length or width

**Construction method**
Hand Woven

**Always in stock**
We keep all our products in stock and ready to ship from our warehouses in the US and EU

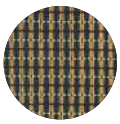

**Night Blue**

**Salt & Pepper**

**Seaweed**

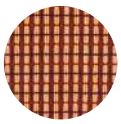

**Terracotta**

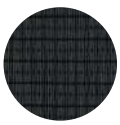

**Pine**

**Rose Quartz**

**Rope Rug Large**

Top view

300 cm / 118.1 in

200 cm / 78.7 in

Weight: 20.1 kg / 44.3 lbs

Total height: 1 cm / 0.39 in

**Rope Rug Medium**

Top view

240 cm / 94.5 in

170 cm / 66.9 in

Weight: 13.9 kg / 30.6 lbs

Total height: 1 cm / 0.39 in

# Solid Rug

*Design by Hem*

Solid Rug rug isn't just a floor covering; it's a sensory experience, offering plush comfort underfoot. Meticulously crafted, its durability ensures a lasting symbol of refined taste. With a generous pile height and with muted, elegant colors, it seamlessly integrates into any sophisticated interior. Elevate your space with the timeless elegance and versatility of the Solid Rug, where traditional craftsmanship meets contemporary appeal.
Knotted in India from 100% New Zealand Wool, the rug meets global ethical standards such as GoodWeave and Woolmark.

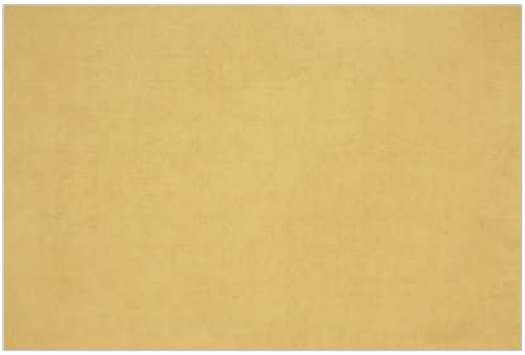

| Product name | Finish | SKU |
|---|---|---|
| **Solid Rug Large** | Beige | 31367 |
| | Butter | 31368 |
| | Rust Red | 31369 |
| | Toffee | 31370 |

**Material**
*100% New Zealand Wool*

**Country of origin**
India

**Size tolerance**
All our rugs are hand-crafted and may vary up to +/- 5% along the total length or width

**Certifications**
Woolmark, GoodWeave

**Always in stock**
We keep all our products in stock and ready to ship from our warehouses in the US and EU

**Beige**

**Butter**

**Rust Red**

**Toffee**

**Solid Rug Large**

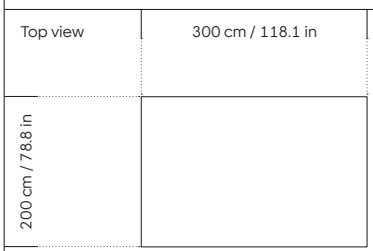


Pile height: 1 cm / 0.4 in

# Rugs — Price List

| Product name | Finish | SKU | Retail Price SEK | List Price SEK (ex VAT) |
|---|---|---|---|---|
| **Curated Collection** | | | | |
| **Monster Rug Extra Large** | Beige / Off-white | 30489 | 43 459 | 35 328 |
| **Monster Rug Extra Large** | Dark Teal / Off-white | 30492 | 43 459 | 35 328 |
| **Monster Rug Extra Large** | Turquoise / Peach | 30491 | 43 459 | 35 328 |
| **Monster Rug Extra Large** | Ultramarine Blue / Off-white | 30490 | 43 459 | 35 328 |
| **Monster Rug Medium** | Beige / Off-white | 30804 | 28 164 | 22 897 |
| **Monster Rug Medium** | Ultramarine Blue / Off-white | 30805 | 28 164 | 22 897 |
| **Rope Rug Large** | Night Blue | 30105 | 14 594 | 11 868 |
| **Rope Rug Large** | Pine | 30485 | 14 594 | 11 868 |
| **Rope Rug Large** | Rose Quartz | 30487 | 14 594 | 11 868 |
| **Rope Rug Large** | Salt & Pepper | 30111 | 14 594 | 11 868 |
| **Rope Rug Large** | Seaweed | 30102 | 14 594 | 11 868 |
| **Rope Rug Large** | Terracotta | 30108 | 14 594 | 11 868 |
| **Rope Rug Medium** | Night Blue | 30106 | 11 489 | 9 338 |
| **Rope Rug Medium** | Pine | 30486 | 11 489 | 9 338 |
| **Rope Rug Medium** | Rose Quartz | 30488 | 11 489 | 9 338 |
| **Rope Rug Medium** | Salt & Pepper | 30112 | 11 489 | 9 338 |
| **Rope Rug Medium** | Seaweed | 30103 | 11 489 | 9 338 |
| **Rope Rug Medium** | Terracotta | 30109 | 11 489 | 9 338 |
| **Solid Rug Large** | Beige | 31367 | 16 434 | 13 363 |
| **Solid Rug Large** | Butter | 31368 | 16 434 | 13 363 |
| **Solid Rug Large** | Rust Red | 31369 | 16 434 | 13 363 |
| **Solid Rug Large** | Toffee | 31370 | 16 434 | 13 363 |

# Throws

# Cushions

All of our throws and cushions are made from the best quality textiles, whether traditional woven wools or radical 3D-printed fabrics. They soften the edges and bring punctuations of color, pattern, and texture to every interior.

# Crepe Cushion

*Design by Hem*

Our cushion collection is a series of versatile cushions to be used wherever and whenever a little soft support is needed in your home, office, or public space. In high quality textiles like chunky bouclé, luxurious textured wool and sumptuous soft velvet, they come in a large variety of colors and two sizes. Apply them liberally to add colorful punctuation, softness and comfort to any interior.

| Product name | Finish | SKU | Product name | Finish | SKU |
|---|---|---|---|---|---|
| **Crepe Cushion Large** | Pine | 30767 | | | |
| | Sand | 30769 | | | |
| | Sunflower | 30771 | | | |
| | Cobalt | 30765 | | | |
| | Pure Green | 30928 | | | |
| | Light Pink | 30926 | | | |
| | Calla | 30930 | | | |
| | Porcelain | 30932 | | | |
| **Crepe Cushion Medium** | Pine | 30775 | | | |
| | Sand | 30777 | | | |
| | Sunflower | 30779 | | | |
| | Cobalt | 30773 | | | |
| | Pure Green | 30929 | | | |
| | Light Pink | 30927 | | | |
| | Calla | 30931 | | | |
| | Porcelain | 30933 | | | |

**Fabric**
*Sera*
by Rohi (Germany)
97% Pure New Wool, 3% Nylon
122,000 Martindale
Pilling 4-5
Lightfastness 5-8
Flame resistance EN 1021: Part 1 & 2,
US Cal. TB 117-2013

**Filling**
75% duck feather and 25% down

**Country of origin**
Poland

**Always in stock**
We keep all our products in stock and ready to ship from our warehouses in the US and EU

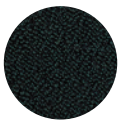

**Pine**
*Sera (Hem exclusive)*

**Sand**
*Sera (Hem exclusive)*

**Sunflower**
*Sera (Hem exclusive)*

**Cobalt**
*Sera (Hem exclusive)*

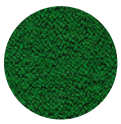

**Pure Green**
*Sera (Hem exclusive)*

**Light Pink**
*Sera (Hem exclusive)*

**Calla**
*Sera*

**Porcelain**
*Sera*

**Samples**
We supply samples of our material finishes. You can order them directly from hem.com/samples

**Crepe Cushion Large**

Top view

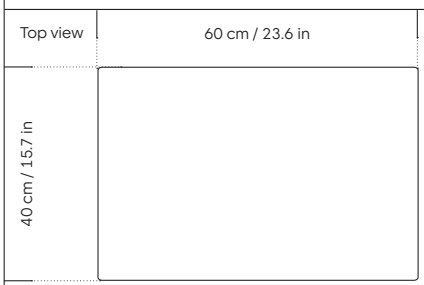


**Crepe Cushion Medium**

Top view

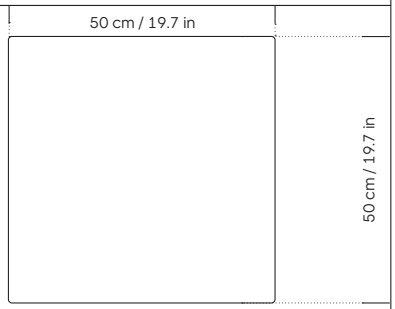

# Great Cushion

*Design by Philippe Malouin*

**Fabric**
*Cifrado*
by Kvadrat/Sahco (Denmark)
42% recycled polyester, 27% viscose, 24% recycled cotton, 7% linen
30,000 Martindale
Pilling 5
Lightfastness 5-6
Flame resistance EN 1021: Part 1 & 2, US Cal. TB 117-2013, IMO 2010 FTP Code Part 8

*Safire*
by Kvadrat/Sahco (Denmark)
43% viscose, 17% polyacrylic, 15% new wool, 9% cotton, 8% polyester, 8% linen
40,000 Martindale
Pilling 3
Lightfastness 5-6
Flame resistance BS 5852: Part 1, EN 1021: Part 1 & 2, US Cal. TB 117-2013, IMO 2010 FTP Code Part 8

*Autumn*
by Kvadrat (Denmark)
100% Recycled Polyester
50,000 Martindale
Pilling 4-5
Lightfastness 6-7
Flame resistance ASTM E 84 Adhered, ASTM E84 Class A Unadhered, EN 1021: Part 1 & 2, IMO 2010 FTP Code Part 8, US Cal. TB 117-2013

**Filling**
75% Duck and Goose Feathers, 25% Down

**Country of origin**
Lithuania

**Cifrado**
*0381*



**Cifrado**
*0111**

**Cifrado**
*0901**

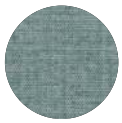

**Cifrado**
*0741**

**Safire**
*0003**

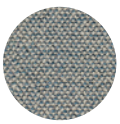

**Safire**
*0012**

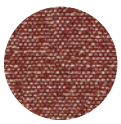

**Safire**
*0013**

**Safire**
*0014**

**Safire**
*0007*

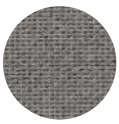

**Autumn**
*0131**

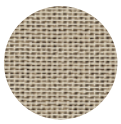

**Autumn**
*0221**

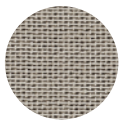

**Autumn**
*0331**

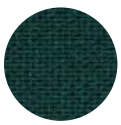

**Autumn**
*0971**

**Autumn**
*0361*

**Samples**
We supply samples of our material finishes. You can order them directly from hem.com/samples

***MTO**
Reach out to your local representative for the full selection of made-to-order options.

**Malange Cushion Large**

Top view

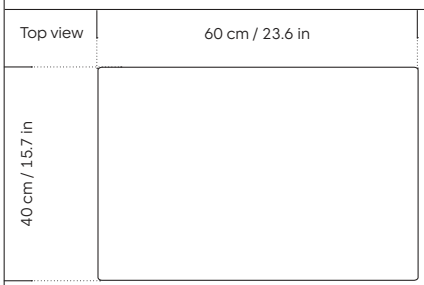


**Malange Cushion Medium**

Top view

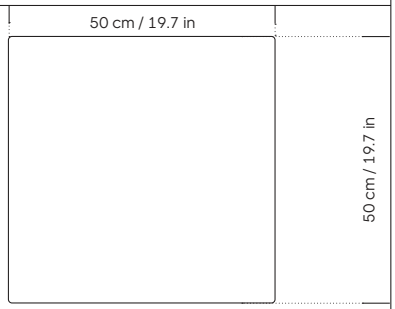

# Monster Cushion

*Design by Siri Carlén*

The Monster patterns by artist and illustrator Siri Carlén are playful exaggerations of markings found in nature. And fittingly, these boldly striped and ringed patterns adorn our most luxurious cushions yet. The Monster Cushions are made to the highest standards; the front is painstakingly hand-knotted by skilled makers in soft new wool and hand-stitched to a durable canvas backing, meaning that your Monster will be around to offer deep comfort and vibrant color for many years to come.

| Product name | Finish | SKU |
|---|---|---|
| **Monster Cushion Medium** | Beige / Off-white | 30797 |
| | Dark Teal / Off-white | 30799 |
| | Turquoise / Peach | 30801 |
| | Ultramarine Blue / Off-white | 30803 |
| **Monster Cushion Large** | Beige / Off-white | 30789 |
| | Dark Teal / Off-white | 30791 |
| | Turquoise / Peach | 30793 |
| | Ultramarine Blue / Off-white | 30795 |

**Front fabric:**
100% New Zealand Wool, hand knotted

**Back fabric:**
100% Cotton

**Filling**
75% Duck and Goose feathers, 25% Down

**Country of origin**
India

**Certifications**
Woolmark, Goodweave

**Always in stock**
We keep all our products in stock and ready to ship from our warehouses in the US and EU

**Beige / Off-white**

**Dark Teal / Off-white**

**Turquoise / Peach**

**Ultramarine Blue / Off-white**

**Monster Cushion Medium**

Top view

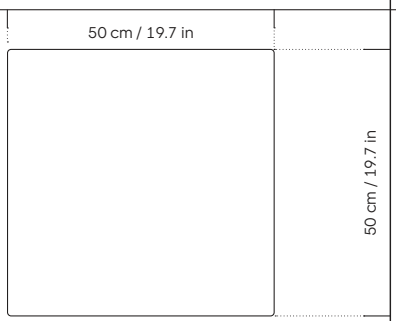


Pile height: 5 cm / 2 in

**Monster Cushion Large**

Top view

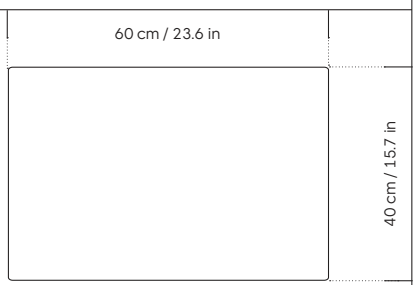


Pile height: 5 cm / 2 in

# Neo Cushion

*Design by Hem*

The Neo Cushion collection is a series of versatile cushions to be used wherever and whenever a little soft support is needed in your home, office, or public space. This textile, called Uniform Melange, has an impossibly smooth appearance and thick, cushiony texture. The Neo Cushion is named after neoprene, a familiar and functional textile with which it shares some similarities, namely a softness to touch and durability. Two tones of thread are used in the 3D knitting, creating an unusual effect that is especially pleasing up close. The Neo Cushions are available in three different colorways and two sizes. Apply them liberally for maximum impact and extreme comfort.

| Product name | Finish | SKU |
|---|---|---|
| **Neo Cushion Large** | Ink | 30028 |
| | Peacock | 30026 |
| | Shell | 30030 |
| | Autumn | 30395 |
| | Liquorice | 30384 |
| | Pink | 30385 |
| **Neo Cushion Medium** | Ink | 30027 |
| | Peacock | 30025 |
| | Shell | 30029 |
| | Autumn | 30394 |
| | Liquorice | 30381 |
| | Pink | 30382 |

**Fabric**
*Uniform Mélange*
by Febrik x Kvadrat (Netherlands)
68% Wool, 22% Nylon, 10% Polyester
100,000 Martindale
Pilling 4
Lightfastness 6
Flame resistance EN 1021: Part 1 & 2, BS 5852: Part 1, US Cal. TB 117

**Filling**
75% Duck and Goose Feathers, 25% Down

**Country of origin**
Poland

**Always in stock**
We keep all our products in stock and ready to ship from our warehouses in the US and EU

**Ink**
*Uniform Mélange (0793)*

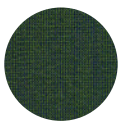

**Peacock**
*Uniform Mélange (0983)*

**Shell**
*Uniform Mélange (0103)*

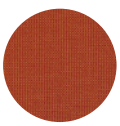

**Autumn**
*Uniform Mélange (0553)*

**Liquorice**
*Uniform Mélange (0353)*

**Pink**
*Uniform Mélange (0623)*

**Samples**
We supply samples of our material finishes. You can order them directly from hem.com/samples

**Neo Cushion Large**

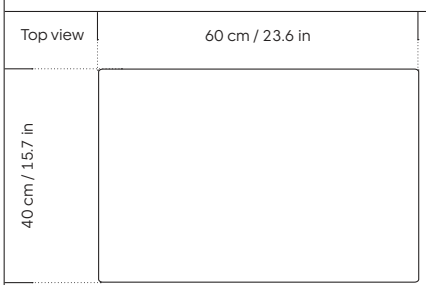


**Neo Cushion Medium**

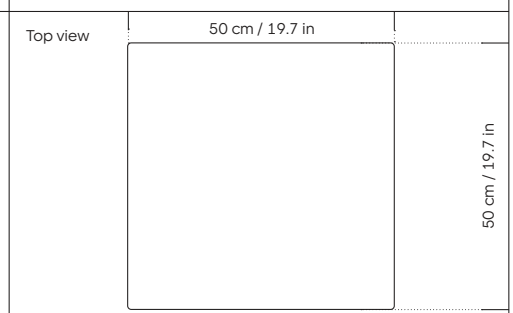

# Cushions — Price List

| Product name | Finish | SKU | Retail Price SEK | List Price SEK (ex VAT) |
|---|---|---|---|---|
| **Curated Collection** | | | | |
| **Crepe Cushion Large** | Calla | 30930 | 1 829 | 1 484 |
| **Crepe Cushion Large** | Cobalt | 30765 | 1 829 | 1 484 |
| **Crepe Cushion Large** | Light Pink | 30926 | 1 829 | 1 484 |
| **Crepe Cushion Large** | Pine | 30767 | 1 829 | 1 484 |
| **Crepe Cushion Large** | Porcelain | 30932 | 1 829 | 1 484 |
| **Crepe Cushion Large** | Pure Green | 30928 | 1 829 | 1 484 |
| **Crepe Cushion Large** | Sand | 30769 | 1 829 | 1 484 |
| **Crepe Cushion Large** | Sunflower | 30771 | 1 829 | 1 484 |
| **Crepe Cushion Medium** | Calla | 30931 | 1 829 | 1 484 |
| **Crepe Cushion Medium** | Cobalt | 30773 | 1 829 | 1 484 |
| **Crepe Cushion Medium** | Light Pink | 30927 | 1 829 | 1 484 |
| **Crepe Cushion Medium** | Pine | 30775 | 1 829 | 1 484 |
| **Crepe Cushion Medium** | Porcelain | 30933 | 1 829 | 1 484 |
| **Crepe Cushion Medium** | Pure Green | 30929 | 1 829 | 1 484 |
| **Crepe Cushion Medium** | Sand | 30777 | 1 829 | 1 484 |
| **Crepe Cushion Medium** | Sunflower | 30779 | 1 829 | 1 484 |
| **Great Cushion Large** | Autumn 0131 | 92623 | 1 599 | 1 300 |
| **Great Cushion Large** | Autumn 0221 | 92624 | 1 599 | 1 300 |
| **Great Cushion Large** | Autumn 0331 | 92625 | 1 599 | 1 300 |
| **Great Cushion Large** | Autumn 0361 | 31608 | 1 599 | 1 300 |
| **Great Cushion Large** | Autumn 0971 | 92626 | 1 599 | 1 300 |
| **Great Cushion Large** | Cifrado 0111 | 92627 | 2 174 | 1 771 |
| **Great Cushion Large** | Cifrado 0381 | 31609 | 2 174 | 1 771 |
| **Great Cushion Large** | Cifrado 0741 | 31610 | 2 174 | 1 771 |
| **Great Cushion Large** | Cifrado 0901 | 92628 | 2 174 | 1 771 |
| **Great Cushion Large** | Safire 0003 | 92629 | 1 829 | 1 484 |
| **Great Cushion Large** | Safire 0007 | 31611 | 1 829 | 1 484 |
| **Great Cushion Large** | Safire 0012 | 92630 | 1 829 | 1 484 |
| **Great Cushion Large** | Safire 0013 | 92632 | 1 829 | 1 484 |
| **Great Cushion Large** | Safire 0014 | 92631 | 1 829 | 1 484 |
| **Great Cushion Medium** | Autumn 0131 | 92603 | 1 599 | 1 300 |
| **Great Cushion Medium** | Autumn 0221 | 92604 | 1 599 | 1 300 |
| **Great Cushion Medium** | Autumn 0331 | 92605 | 1 599 | 1 300 |
| **Great Cushion Medium** | Autumn 0361 | 31612 | 1 599 | 1 300 |
| **Great Cushion Medium** | Autumn 0971 | 92606 | 1 599 | 1 300 |
| **Great Cushion Medium** | Cifrado 0111 | 92607 | 2 174 | 1 771 |
| **Great Cushion Medium** | Cifrado 0381 | 31613 | 2 174 | 1 771 |
| **Great Cushion Medium** | Cifrado 0741 | 31614 | 2 174 | 1 771 |
| **Great Cushion Medium** | Cifrado 0901 | 92608 | 2 174 | 1 771 |
| **Great Cushion Medium** | Safire 0003 | 92609 | 1 829 | 1 484 |
| **Great Cushion Medium** | Safire 0007 | 31615 | 1 829 | 1 484 |
| **Great Cushion Medium** | Safire 0012 | 92610 | 1 829 | 1 484 |
| **Great Cushion Medium** | Safire 0013 | 92612 | 1 829 | 1 484 |
| **Great Cushion Medium** | Safire 0014 | 92611 | 1 829 | 1 484 |
| **Monster Cushion Large** | Beige / Off-white | 30789 | 2 979 | 2 427 |
| **Monster Cushion Large** | Dark Teal / Off-white | 30791 | 2 979 | 2 427 |
| **Monster Cushion Large** | Turquoise / Peach | 30793 | 2 979 | 2 427 |
| **Monster Cushion Large** | Ultramarine Blue / Off-white | 30795 | 2 979 | 2 427 |
| **Monster Cushion Medium** | Beige / Off-white | 30797 | 2 979 | 2 427 |
| **Monster Cushion Medium** | Dark Teal / Off-white | 30799 | 2 979 | 2 427 |
| **Monster Cushion Medium** | Turquoise / Peach | 30801 | 2 979 | 2 427 |
| **Monster Cushion Medium** | Ultramarine Blue / Off-white | 30803 | 2 979 | 2 427 |
| **Neo Cushion Large** | Autumn | 30395 | 2 289 | 1 863 |
| **Neo Cushion Large** | Coral | 30385 | 2 289 | 1 863 |
| **Neo Cushion Large** | Ink | 30028 | 2 289 | 1 863 |
| **Neo Cushion Large** | Licorice | 30384 | 2 289 | 1 863 |
| **Neo Cushion Large** | Peacock | 30026 | 2 289 | 1 863 |
| **Neo Cushion Large** | Shell | 30030 | 2 289 | 1 863 |
| **Neo Cushion Medium** | Autumn | 30394 | 2 289 | 1 863 |
| **Neo Cushion Medium** | Coral | 30382 | 2 289 | 1 863 |
| **Neo Cushion Medium** | Ink | 30027 | 2 289 | 1 863 |
| **Neo Cushion Medium** | Licorice | 30381 | 2 289 | 1 863 |
| **Neo Cushion Medium** | Peacock | 30025 | 2 289 | 1 863 |
| **Neo Cushion Medium** | Shell | 30029 | 2 289 | 1 863 |

# Cushions — Price List

| Product name | Finish | SKU | Retail Price SEK | List Price SEK (ex VAT) |
|---|---|---|---|---|
| **Graded-in Textile*** | | | | |
| **Great Cushion Large** | Grade 2 | | 1 714 | 1 392 |
| **Great Cushion Large** | Grade 5 | | 2 174 | 1 771 |
| **Great Cushion Large** | Grade 6 | | 2 519 | 2 047 |
| **Great Cushion Medium** | Grade 2 | | 1 714 | 1 392 |
| **Great Cushion Medium** | Grade 5 | | 2 174 | 1 771 |
| **Great Cushion Medium** | Grade 6 | | 2 519 | 2 047 |



*Please make sure to check pro.hem.com for the most up to date information on finishes and stock availability.

# Accessories

# Bronto Espresso Cup (Set of 4)

*Design by Supergroup*

Stocky, bulky and bold, Bronto tableware is a pleasing handful of ceramics. An ample mug and chunky espresso cup are immediately recognizable by their uncommonly fat handles. A side plate and bowl's rounded edges and nonchalant shapes follows suit. Even the smallest of the Bronto family, an eggcup, has serious chunk. As with all Supergroup designs, breezy forms belie technical expertise and, in fact, the exaggerated soft outlines of the Bronto range are a feat of ceramic production. A joyful color palette of high gloss glazes, plus a natural clay option, completes the Supergroup signature. Bronto is intended as your go to set for casual breakfasts, and zippy coffee breaks. 'Small but mighty' might be a fitting description of the Bronto Espresso Cups. These diminutive vessels pack a punch because of their elemental forms and bold color.

| Product name | Finish | SKU |
|---|---|---|
| **Bronto Espresso Cup** | Pink | 30674 |
| | Orange | 30675 |
| | Green | 30676 |
| | Yellow | 30677 |
| | Sand | 30683 |
| | Multi | 30678 |
| | Brown | 31539 |

**Material**
*Ceramics*
Glazed ceramics

**Country of origin**
Sri Lanka

**Usage**
Dishwasher safe
Food safe

**Always in stock**
We keep all our products in stock and ready to ship from our warehouses in the US and EU

**Pink**
*Glazed ceramics*

**Orange**
*Glazed ceramics*

**Green**
*Glazed ceramics*

**Yellow**
*Glazed ceramics*

**Sand**
*Glazed ceramics*

**Multi**
*Glazed ceramics*

**Brown**
*Glazed ceramics*

**Bronto Espresso Cup**

Top view

Front view

Volume 100 ml

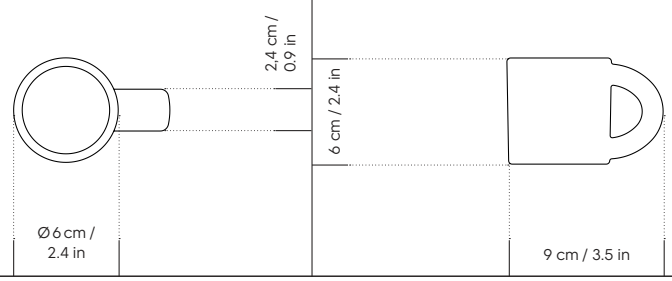

# Bronto Mug (Set of 2)

*Design by Supergroup*

Stocky, bulky and bold, Bronto tableware is a pleasing handful of ceramics. An ample mug and chunky espresso cup are immediately recognizable by their uncommonly fat handles. A side plate and bowl's rounded edges and nonchalant shapes follows suit. Even the smallest of the Bronto family, an eggcup, has serious chunk. As with all Supergroup designs, breezy forms belie technical expertise and, in fact, the exaggerated soft outlines of the Bronto range are a feat of ceramic production. A joyful color palette of high gloss glazes, plus a natural clay option, completes the Supergroup signature. Bronto is intended as your go to set for casual breakfasts, and zippy coffee breaks. The Bronto Mug has a distinctive profile, thanks to its pleasingly fat handle. Bronto Mug's cheery shape disguises a seriously engineered product that pushes the boundaries of industrial ceramic production.

| Product name | Finish | SKU |
|---|---|---|
| **Bronto Mug** | Pink | 30679 |
| | Orange | 30680 |
| | Green | 30681 |
| | Yellow | 30682 |
| | Sand | 30684 |
| | Brown | 31538 |

**Material**
*Ceramics*
Glazed ceramics

**Country of origin**
Sri Lanka

**Usage**
Dishwasher safe
Food safe

**Always in stock**
We keep all our products in stock and ready to ship from our warehouses in the US and EU

**Pink**
*Glazed ceramics*

**Orange**
*Glazed ceramics*

**Green**
*Glazed ceramics*

**Yellow**
*Glazed ceramics*

**Sand**
*Glazed ceramics*

**Brown**
*Glazed ceramics*

**Bronto Mug**

Top view

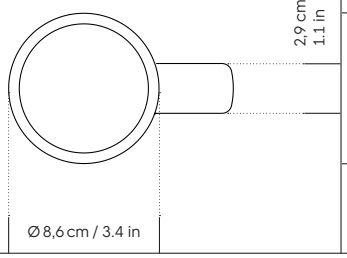


Front view

Volume 300 ml

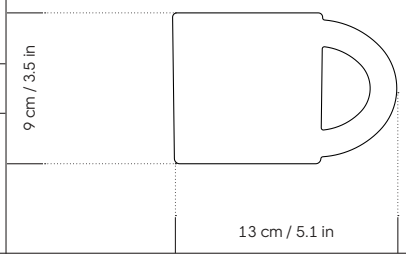

# Bronto Plate (Set of 2)

*Design by Supergroup*

Stocky, bulky and bold, Bronto tableware is a pleasing handful of ceramics. An ample mug and chunky espresso cup are immediately recognizable by their uncommonly fat handles. A side plate and bowl's rounded edges and nonchalant shapes follows suit. Even the smallest of the Bronto family, an eggcup, has serious chunk. As with all Supergroup designs, breezy forms belie technical expertise and, in fact, the exaggerated soft outlines of the Bronto range are a feat of ceramic production. A joyful color palette of high gloss glazes, plus a natural clay option, completes the Supergroup signature. Bronto is intended as your go to set for casual breakfasts, and zippy coffee breaks. The Plate's softly rounded edges give this useful piece of tableware an exaggerated profile that is pure Bronto in its chunky expression.

| Product name | Finish | SKU |
|---|---|---|
| **Bronto Plate** | Pink | 30670 |
| | Orange | 30671 |
| | Green | 30672 |
| | Yellow | 30673 |
| | Brown | 31540 |

**Material**
*Ceramics*
Glazed ceramics

**Country of origin**
Sri Lanka

**Usage**
Dishwasher safe
Food safe
Microwave safe

**Always in stock**
We keep all our products in stock and ready to ship from our warehouses in the US and EU

**Pink**
*Glazed ceramics*

**Orange**
*Glazed ceramics*

**Green**
*Glazed ceramics*

**Yellow**
*Glazed ceramics*

**Brown**
*Glazed ceramics*

**Bronto Plate**

Top view

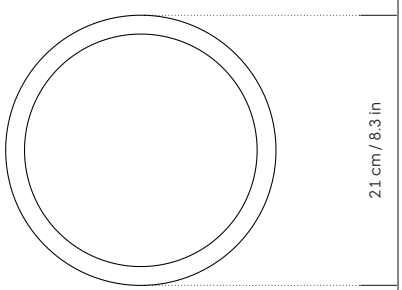


Front view

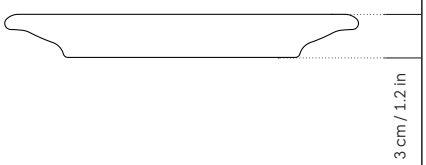

# Bronto Bowl (Set of 2)

*Design by Supergroup*

Stocky, bulky and bold, Bronto tableware is a pleasing handful of ceramics. An ample mug and chunky espresso cup are immediately recognizable by their uncommonly fat handles. A side plate and bowl's rounded edges and nonchalant shapes follows suit. Even the smallest of the Bronto family, an eggcup, has serious chunk. As with all Supergroup designs, breezy forms belie technical expertise and, in fact, the exaggerated soft outlines of the Bronto range are a feat of ceramic production. A joyful color palette of high gloss glazes, plus a natural clay option, completes the Supergroup signature. Bronto is intended as your go to set for casual breakfasts, and zippy coffee breaks. The Bronto Bowl is deliciously glossy, deep and generous, featuring an exaggerated softly rounded edge for added Bronto-esque curvature.

| Product name | Finish | SKU |
|---|---|---|
| **Bronto Bowl** | Pink | 31005 |
| | Orange | 31006 |
| | Green | 31008 |
| | Yellow | 31007 |
| | Brown | 31537 |

**Material**
*Ceramics*
Glazed ceramics

**Country of origin**
Sri Lanka

**Usage**
Dishwasher safe
Food safe
Microwave safe

**Always in stock**
We keep all our products in stock and ready to ship from our warehouses in the US and EU

**Pink**
*Glazed ceramics*

**Orange**
*Glazed ceramics*

**Green**
*Glazed ceramics*

**Yellow**
*Glazed ceramics*

**Brown**
*Glazed ceramics*

**Bronto Bowl**

Top view

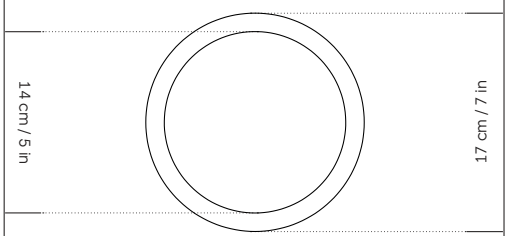


Front view

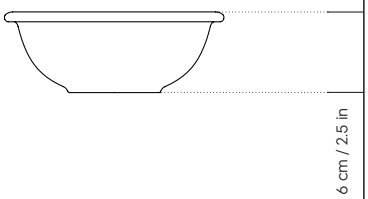

# Bronto Egg Cup (Set of 2)

*Design by Supergroup*

Stocky, bulky and bold, Bronto tableware is a pleasing handful of ceramics. An ample mug and chunky espresso cup are immediately recognizable by their uncommonly fat handles. A side plate and bowl's rounded edges and nonchalant shapes follows suit. Even the smallest of the Bronto family, an eggcup, has serious chunk. As with all Supergroup designs, breezy forms belie technical expertise and, in fact, the exaggerated soft outlines of the Bronto range are a feat of ceramic production. A joyful color palette of high gloss glazes, plus a natural clay option, completes the Supergroup signature. Bronto is intended as your go to set for casual breakfasts, and zippy coffee breaks. Although the most petite item in the Bronto Family, our Eggcup has maximum appeal. Chunky, gutsy, bold and bright, we challenge you not to want it. Can also be used as a pinch pot.

| Product name | Finish | SKU |
|---|---|---|
| **Bronto Egg Cup** | Pink | 31012 |
| | Orange | 31009 |
| | Green | 31010 |
| | Yellow | 31011 |
| | Brown | 31536 |

**Material**
*Ceramics*
Glazed ceramics

**Country of origin**
Sri Lanka

**Usage**
Dishwasher safe
Food safe
Microwave safe

**Always in stock**
We keep all our products in stock and ready to ship from our warehouses in the US and EU

**Pink**
*Glazed ceramics*

**Orange**
*Glazed ceramics*

**Green**
*Glazed ceramics*

**Yellow**
*Glazed ceramics*

**Brown**
*Glazed ceramics*

**Bronto Egg Cup**

Top view

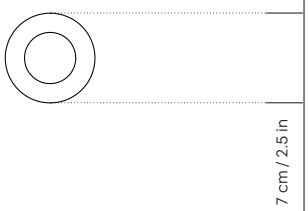


Front view

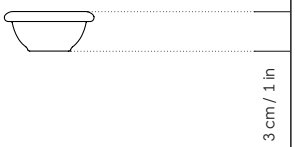

# Fars Glas Drinking Glass (Set of 2)

*Design by Erik Höglund*

Fars Glas, which translates to “father’s glass” in Swedish, is a collaborative effortby Kosta Boda and Hem, reinvigorating an iconic archival design. Originally conceived in 1969 by the famous Swedish glassblower and designer Erik Höglund, this glass captivates with its abundant proportions, seamless simplicity, and unwavering durability. Crafted through mouth-blown techniques using lead-free glass, Fars Glas emerges as an enduring, indestructible design that embodies a harmonious blend of tradition and modernity, suitable for any occasion. Its robust nature ensures that this glass will withstand the test of time, for gatherings of generations to come.

| Product name | Finish | SKU |
|---|---|---|
| **Fars Glas (set of 2)** | Clear | 31371 |

**Material**
*Glass*
Lead free glass

**Country of origin**
Poland

**Usage**
Dishwasher safe
Food safe

**Always in stock**
We keep all our products in stock and ready to ship from our warehouses in the US and EU

**Clear**
*Glass*

**Fars Glas**

Top view

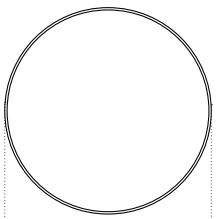


Front view

Volume 370 ml / 12.5 oz

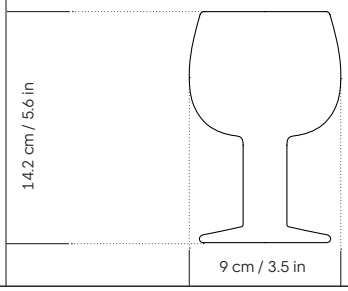

# Molino Grinder

*Design by Fabien Cappello*

Think of the Molino Grinder as a functional sculpture for your tabletop. This super-sized utensil is efficient at granulating salt, pepper and spices, and its blown-up form is a graphic monument for your dinner table, too. Molino is a characteristically exuberant design from Fabien Cappello whose work reflects the energy and vivacity of Mexico, where he lives and works. The hand-painted, striped Molino grinders are made from turned solid beech wood and finished with high-gloss lacquer, while the solid beech Molino grinders are finished with a sheen lacquer to bring out the beauty of their natural properties.

| Product name | Finish | SKU |
|---|---|---|
| **Molino Grinder Horizontal** | Green / Yellow | 30700 |
| | Green / Magenta | 30701 |
| | Black / White | 31059 |
| | Beech Natural | 31439 |
| **Molino Grind Vertical** | Honey / Magenta | 30698 |
| | Honey / Blue | 30699 |
| | Black / White | 31060 |
| | Beech Natural | 31440 |

**Material**
FSC wood

*Hand-painted beech*
Water based lacquer

*Beech Natural*
Acrylic lacquer

**Grinder**
Molino Grinder uses as high-quality ceramic grinding mechanism called CrushGrind®, making it highly flexible and capable of grinding salt, pepper, whole dried herbs and spices all with the same grinder

**Country of origin**
Poland

**Always in stock**
We keep all our products in stock and ready to ship from our warehouses in the US and EU

**Honey / Magenta**
*Hand-painted beech*

**Honey / Blue**
*Hand-painted beech*

**Green / Yellow**
*Hand-painted beech*

**Green / Magenta**
*Hand-painted beech*

**Black / White**
*Hand-painted beech*

**Beech Natural**
*Solid Beech*

**MTO**
Please refer to the price list or reach out to your local representative for our made-to-order options

**Molino Grinder with vertical bar**

Front view

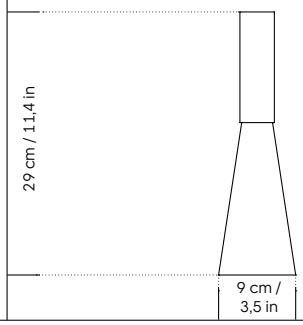


**Molino Grinder with horizontal bar**

Front view

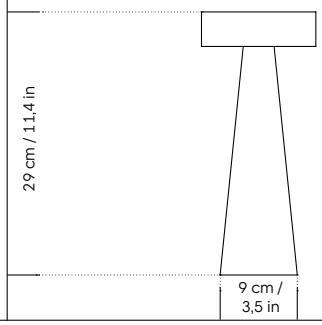

# Accessories — Price List

| Product name | Finish | SKU | Retail Price SEK | List Price SEK (ex VAT) |
|---|---|---|---|---|
| **Curated Collection** | | | | |
| **Bronto Bowl (Set of 2)** | Brown | 31537 | 1 024 | 828 |
| **Bronto Bowl (Set of 2)** | Green | 31008 | 1 024 | 828 |
| **Bronto Bowl (Set of 2)** | Orange | 31006 | 1 024 | 828 |
| **Bronto Bowl (Set of 2)** | Pink | 31005 | 1 024 | 828 |
| **Bronto Bowl (Set of 2)** | Yellow | 31007 | 1 024 | 828 |
| **Bronto Egg Cup (Set of 2)** | Brown | 31536 | 449 | 368 |
| **Bronto Egg Cup (Set of 2)** | Green | 31010 | 449 | 368 |
| **Bronto Egg Cup (Set of 2)** | Orange | 31009 | 449 | 368 |
| **Bronto Egg Cup (Set of 2)** | Pink | 31012 | 449 | 368 |
| **Bronto Egg Cup (Set of 2)** | Yellow | 31011 | 449 | 368 |
| **Bronto Espresso Cup (Set of 4)** | Brown | 31539 | 1 139 | 920 |
| **Bronto Espresso Cup (Set of 4)** | Green | 30676 | 1 139 | 920 |
| **Bronto Espresso Cup (Set of 4)** | Multi | 30678 | 1 139 | 920 |
| **Bronto Espresso Cup (Set of 4)** | Orange | 30675 | 1 139 | 920 |
| **Bronto Espresso Cup (Set of 4)** | Pink | 30674 | 1 139 | 920 |
| **Bronto Espresso Cup (Set of 4)** | Sand | 30683 | 1 139 | 920 |
| **Bronto Espresso Cup (Set of 4)** | Yellow | 30677 | 1 139 | 920 |
| **Bronto Mug (Set of 2)** | Brown | 31538 | 1 024 | 828 |
| **Bronto Mug (Set of 2)** | Green | 30681 | 1 024 | 828 |
| **Bronto Mug (Set of 2)** | Orange | 30680 | 1 024 | 828 |
| **Bronto Mug (Set of 2)** | Pink | 30679 | 1 024 | 828 |
| **Bronto Mug (Set of 2)** | Yellow | 30682 | 1 024 | 828 |
| **Bronto Plate (Set of 2)** | Brown | 31540 | 909 | 736 |
| **Bronto Plate (Set of 2)** | Green | 30672 | 909 | 736 |
| **Bronto Plate (Set of 2)** | Orange | 30671 | 909 | 736 |
| **Bronto Plate (Set of 2)** | Pink | 30670 | 909 | 736 |
| **Bronto Plate (Set of 2)** | Yellow | 30673 | 909 | 736 |
| **Fars Glas Drinking Glass (Set of 2)** | Clear | 31371 | 1 254 | 1 024 |
| **Molino Grinder Horizontal** | Beech Natural | 31439 | 1 829 | 1 484 |
| **Molino Grinder Horizontal** | Black / White | 31059 | 2 289 | 1 863 |
| **Molino Grinder Horizontal** | Green / Magenta | 30701 | 2 289 | 1 863 |
| **Molino Grinder Horizontal** | Green / Yellow | 30700 | 2 289 | 1 863 |
| **Molino Grinder Vertical** | Beech Natural | 31440 | 1 829 | 1 484 |
| **Molino Grinder Vertical** | Black / White | 31060 | 2 289 | 1 863 |
| **Molino Grinder Vertical** | Honey / Blue | 30699 | 2 289 | 1 863 |
| **Molino Grinder Vertical** | Honey / Magenta | 30698 | 2 289 | 1 863 |

# Care

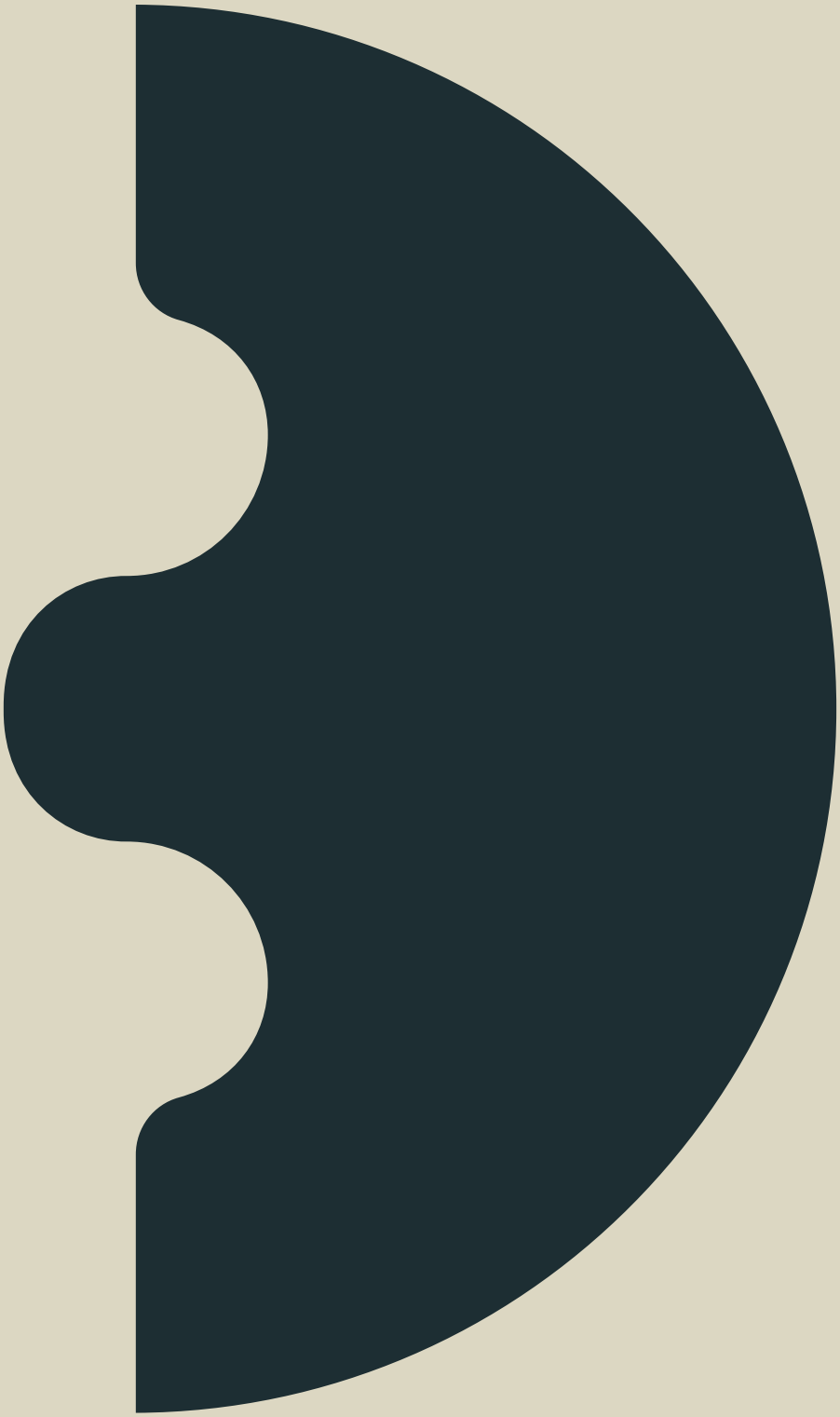

# Instructions

# General care and cleaning instructions

*General cleaning*
Using a solution of water mixed with a mild, environmentally friendly general detergent or washing up liquid, clean the surface with a soft, damp cloth. Always dry the surface after cleaning using a dry cloth. If the surface has a grain, always rub in the direction of the grain. If there is no directional grain, use a light, circular motion. Never use powdered abrasives or cleaning solutions that contain abrasives, or scotch pads / scouring pads as this may damage the surface.

# Natural surfaces, timber, laminates and veneer

**High pressure laminates / melamine surfaces**

*General cleaning*
Using a solution of water mixed with a mild, environmentally friendly general detergent or washing up liquid, clean the surface with a soft, damp cloth. Always dry the surface after cleaning using a dry cloth. If the surface has a grain, always rub in the direction of the grain. If there is no directional grain, use a light, circular motion. Never use powdered abrasives or cleaning solutions that contain abrasives, or scotch pads / scouring pads as this may damage the surface.

**Wood veneers & laminated wood**

*General care & cleaning*
Using a solution of water mixed with a mild, environmentally friendly general detergent or washing up liquid, clean the surface with a soft, damp cloth. Wipe up any spills immediately to avoid stains. Take care not to soak the surface, and ensure the surface is well dried after cleaning before use. Placing objects on a wet surface can leave marks or rings. Never use powdered abrasives or cleaning solutions that contain abrasives, scotch pads/scouring pads or sandpaper as this may damage the surface. A veneered wood surface should be treated as any other wooden table. Always use a coaster under drinks to protect the surface, and never place any hot objects directly on the surface. Always leave an air gap if placed next to a radiator or heat source.

*Light Exposure*
For the first few weeks, objects should not be left on the table for too long as it may cause discoloration due to light exposure. After a few weeks the surface will settle. In general, uneven exposure to light should be avoided where possible, to ensure an even ageing of the wood material.

**Solid wood—lacquered finish**

*General care & cleaning*
Using a solution of water mixed with a mild, environmentally friendly general detergent or washing up liquid, clean the surface with a soft, damp cloth. Wipe up any spills immediately to avoid stains. Take care not to soak the surface, and ensure the surface is well dried after cleaning before use. Placing objects on a wet surface can leave marks or rings. Do not use abrasive pads or sandpaper on the wooden surface. Always use a coaster under drinks to protect the surface, and never place any hot objects directly on the surface. Always leave an air gap if placed next to a radiator or heat source.

*Light Exposure*
For the first few weeks, objects should not be left on the table for too long as it may cause discoloration due to light exposure. After a few weeks the surface will settle. In general, uneven exposure to light should be avoided where possible, to ensure an even ageing of the wood material. In case of significant damage to the surface finish, solid wood can be sanded down and re-lacquered. *This should only be undertaken by a professional.*

**Solid wood—oiled or waxed finish**

*General care & cleaning*
Using a solution of water mixed with a mild, environmentally friendly general detergent or washing up liquid, clean the surface with a soft, damp cloth. Wipe up any spills immediately to avoid stains. Take care not to soak the surface, and ensure the surface is well dried after cleaning before use. *Placing objects on a wet surface can leave marks or rings.* Do not use abrasive pads or sandpaper on the wooden surface. Always use a coaster under drinks to protect the surface, and never place any hot objects directly on the surface. Always leave an air gap if placed next to a radiator or heat source.

*Light Exposure*
For the first few weeks, objects should not be left on the table for too long as it may cause discoloration due to light exposure. After a few weeks the surface will settle. In general, uneven exposure to light should be avoided where possible, to ensure an even ageing of the wood material.

*Re-application of Oil or Wax*
Protective oil or wax should be re-applied as needed to maintain the woods' resistance to stains and spillages. Always use a high-quality, colorless, furniture-grade wood oil/wax, designed for the specific wood species of the product (Oak, Ash etc.). Availability of surface treatment products vary by region, so check with your local hardware store for advice on the best product to use. Clean the surface first as per the above instructions. Always apply any treatment in the direction of the grain, and wipe off any excess with a clean, dry cloth. Follow the instructions on the oil / wax product packaging for specific guidance on the application. If in doubt, consult a professional to refinish solid wood furniture. Hem will not be responsible for any issues that arise from refinishing of our products.

# Metals

*General cleaning*
Always test a small area prior to cleaning. Wipe with a clean and dry or slightly damp cloth wrung out in a mild solution of environmental friendly detergent. Always dry with a clean and dry cloth after removing any residue. Keep the surface clean and dry. It may be stained permanently if any residue is not removed relatively quickly. Do not use any abrasive or chemical cleaning products, if not advised otherwise, as it can damage the surface.

**Anodized aluminum**
Always test a small area prior to cleaning. Wipe with a clean and dry or slightly damp cloth wrung out in a mild solution of environmental friendly detergent. Always dry with a clean and dry cloth after removing any residue. Keep the surface clean

and dry. It may be stained permanently if any residue is not removed relatively quickly. Do not use any abrasive or chemical cleaning products or solvents, if not advised otherwise, as it can damage the surface. Always dry with a clean and dry cloth after to remove any residue.

**Chrome or polished metal**
Always test a small area prior to cleaning. Wipe with a clean and dry or slightly damp cloth wrung out in a mild solution of environmental friendly detergent. Always dry with a clean and dry cloth after removing any residue. Keep the surface clean and dry. It may be stained permanently if any residueis not removed relatively quickly. Do not use any abrasive or chemical cleaning products, if not advised otherwise, as it can damage the surface. For everyday cleaning, wipe with a clean and dry or slightly damp cloth wrung in a glass cleaner. Always dry with a clean and dry cloth after to remove any residue.

**Copper / brass**
Always test a small area prior to cleaning. Wipe with a clean and dry or slightly damp cloth wrung out in a mild solution of environmental friendly detergent. Always dry with a clean and dry cloth after removing any residue. Keep the surface clean and dry. It may be stained permanently if any residue is not removed relatively quickly. Do not use any abrasive or chemical cleaning products, if not advised otherwise, as it can damage the surface. The copper and brass is untreated and will develop an elegant patina over time as it's handled or put in contact with liquids. Though the finish is intentionally left untreated they can be returned to their original polished state using a dedicated brass or copper polishing set.

**Powder coated steel**
Always test a small area prior to cleaning. Wipe with a clean and dry or slightly damp cloth wrung out in a mild solution of environmental friendly detergent. Always dry with a clean and dry cloth after removing any residue. Keep the surface clean and dry. It may be stained permanently if any residue is not removed relatively quickly. Do not use any abrasive or chemical cleaning products, if not advised otherwise, as it can damage the surface.

**Stainless steel**
Always test a small area prior to cleaning. Wipe with a clean and dry or slightly damp cloth wrung out in a mild solution of environmental friendly detergent. Always dry with a clean and dry cloth after removing any residue. Keep the surface clean and dry. It may be stained permanently if any residue is not removed relatively quickly. Do not use any abrasive or chemical cleaning products, if not advised otherwise, as it can damage the surface. Grease stains can be carefully removed using a cloth dabbed in glass cleaner. Always dry with a clean and dry cloth after to remove any residue.

# Other materials

**Cover fabrics & upholstery**
Each fabric requires its own care and maintenance, please refer to the specific fabric for more details. Dust and dirt wear textiles down over time, so regular cleaning and maintenance is the best way to ensure the longest possible lifetime of your product. Vacuum the product frequently on a low to medium setting, preferably with an upholstery nozzle, and be careful not to rub the material with force as this potentially could damage the textile. Remove stains by patting the area gently

with a cloth wrung in lukewarm to hot water (preferably distilled), start from the outer rim of the spill and work toward the centre. If the stain is persistent we recommend using an environmentally friendly mild detergent, and then again patting the area down. To avoid any unforeseen damages, please try the detergent on a less visible area of the product. Finish off the stain removal by firstly repeating the process with clean water, to absorb any residue detergents, then take a dry cloth to dry up any remaining water. Please note these are only recommendations and we can never guarantee complete stain removal. We always recommend contacting a professional cleaning company for additional advice regarding your stain Upholstered furniture may be affected by exposure to direct sunlight or heat, consequently we recommend to avoid placing the products next to windows, radiators or fireplaces.

**Glass**
Glass should be wiped with a dry cloth. Clean the surface with a glass cleaner as needed. Never use abrasives or sharp objects to clean the glass.

**Leather**
Dust and dirt wear the leather down over time, so regular cleaning and maintenance is the best way to ensure the longest possible lifetime of your product. As the leather is semi-aniline, it will mark and patinate over time as it comes into contact with the natural oils from skin, and moisture.Vacuum the product with a soft brush frequently on a low to medium setting and be careful not to rub the material with force as this potentially could damage the leather. Alternatively use a dry cloth to remove any dust or dirt. If liquids are spilled on the leather, we recommend acting quickly and dabbing up as much as possible with a dry cloth or paper. Take care not to rub the surface, since this may spread the mark or push dirt into the pores of the leather. Leather furniture may be affected by exposure to direct sunlight or heat, consequently we recommend to avoid placing the products next to windows, radiators or fireplaces.

**Plastics**
Plastics should be wiped with a dry cloth. Dirt can usually be removed with a cloth and lukewarm water. If the stain persists, a mild detergent can be used to clean the surface. Always wipe off the surface with clean cloth and water, and then dry off any residue water. Don't use any abrasive tools, abrasive cleaning agents, strong chemicals or sharp objects as this may damage the surface. Colored plastic exposed to direct sunlight will over time start to fade due to the ultraviolet radiation. For this reason we recommend avoiding direct sunlight when possible.

**Rugs**
Dust and dirt wear the rugs down over time, so regular cleaning and maintenance is the best way to ensure the longest possible lifetime of your product. Shedding of loose fibers will occur with all new rugs. Use scissors to trim (do not pull) loose yarn to avoid unravelling. Vacuum the rug frequently on a low setting, never use hard roller brushes and be careful not to rub the material with force as this potentially could damage the rug. Clean stains directly as the spill occurs, dabbing the area with clean water. If the stain is persistent we recommend using an environmentally friendly mild detergent, and then again patting the area down. To avoid any unforeseen damages, please try the detergent on a not too visible area of the product. Finish off the stain removal by firstly repeating the process with clean water, to absorb any residue detergents, then take a dry cloth to dry up any remaining water. Please note these are only recommendations. We can never guarantee complete stain removal. We always recommend contacting a professional rug cleaning company for additional advice regarding your stain, and from time to time to have it dry-cleaned. Avoid direct and continuous

exposure to sunlight and rotate the rug periodically to promote even wear. A rug pad is recommended to extend the life of your rug further.

**Stone materials**
Clean your stone objects with a dry cloth. Dirt can usually be removed with a cloth and lukewarm water. If the stain persists, a mild detergent can be used to clean the surface. Always wipe off the surface with clean cloth and water, and then dry off any residue water. Don't use any abrasive tools, abrasive cleaning agents, strong chemicals or sharp objects as this may damage the surface. Stone is a porous material and liquids, such as coffee, tea and wine, or products with strong color agents, such as lipstick, can cause stains. To avoid this, make sure to wipe off any spills or stains directly with a damp cloth. To a small extent stone, like with all natural materials, may have natural marks on the surface which are indications of genuine stone.

# Sustainability

# Commitment

Making designs of obsessive quality includes a thoughtful approach to sustainability. At Hem, we work hard to reduce our environmental impact in every aspect of our work, recognising how our decision-making, on both the large and the small issues, has consequences. As a European design brand serving a global customer, we adhere to both local and international protocols, alongside which we have set out our own key objectives, which we explain on the following pages.

# Enduring and Durable

It has always been Hem's guiding principle to design and make furniture that endures. You will often hear us repeat the motto; "designing and making pieces for the auction houses of tomorrow". In the simplest of terms; we want our objects to last, to transcend fashions, to remain desirable for generations, and in doing so they will remain in use and outside of the waste stream.

We achieve durability through a rigorous and lengthy design process and by consistently and stubbornly choosing high quality materials and manufacturing. It is not too much to say that we have a very exacting design and research process of which we are very proud. This translates to an extremely low "reject rate" during our manufacturing processes and an extremely low "claim rate" with our customers, meaning there is little waste generated during making and our objects rarely break or are returned. We also achieve longevity by designing systems of furniture that can grow with their owner, rather than be replaced. Did you know that we keep spare parts for our key designs in stock for years? Meaning that your Hem products can often be repaired and their usable life extended.

Most of our collection is certified to EU and American contract requirements and durability protocols, the highest standards for furniture manufacturing. You can access a full list of all the certifications we adhere to here:

# Circularity

Although we hope all of our objects remain in use for generations, they will inevitably find themselves back in the circular economy at some point, so we address the end life of an object at the beginning of the design process. Currently, we use recyclable materials whenever possible and are working towards introducing more sustainable alternatives into our material palette. We have long refrained from using virgin plastics unless necessary in our designs and we use single materials where we can, meaning objects can be easily broken down for recycling.

# Material Transparency

A thorough understanding of the materials we use is a key part of the Hem design process. You might have noticed that many of our products are singular in their materiality, thereby celebrating and revealing that material in the most direct way we can. We gather together all data about our materials and their sourcing for our customers to review; each Hem product is issued with an Ecology Sheet. See an example here:

We ensure all our materials are ethically grown, harvested, sourced, or made. We only use low-emitting materials and make sure that each is compliant with international standards. The majority of our wooden objects are made with FSC or PEFC timber and we can provide alternative documentation in the instances where they are not. Lastly, our dedication to responsible material usage is across the board; all of Hem's packaging is made from 100% recycled cardboard and we increasingly find utility in the material offcuts produced during our manufacturing, reducing waste wherever we can.

# Manufacturing

Making furniture requires a lot of energy. We seek to minimize the energy we use wherever we can. We do this in a number of ways: Firstly, by partnering with responsible factories and makers – the majority of our collection is produced in Europe and as such our products strictly adhere to EU environmental standards and industry certifications, these are some of the most robust in the world. And when our products are made outside of the EU, we are just as stringent about good practice and efficient energy use. We even consider energy use whilst designing our products; minimizing the amount of processes needed and always choosing energy efficient methods of making.

# Delivery & Supply Chain

Hem serves an international customer, with most of our sales being made online. Therefore, our delivery and supply chain are a pivotal part of our business. We endeavor to control and reduce the distance our products travel from multiple warehouses on different continents and insist our trucks and containers are always at least 90% full before they travel. We also limit unnecessary freight between production facilities by building this into our designs from the beginning, always producing a product at a single factory or workshop if we can. Doing so substantially reduces the hidden carbon footprint of the production process.

Instagram @hem
info@hem.com
www.hem.com

©Hem 2026